Proximity sensor enables human body detection

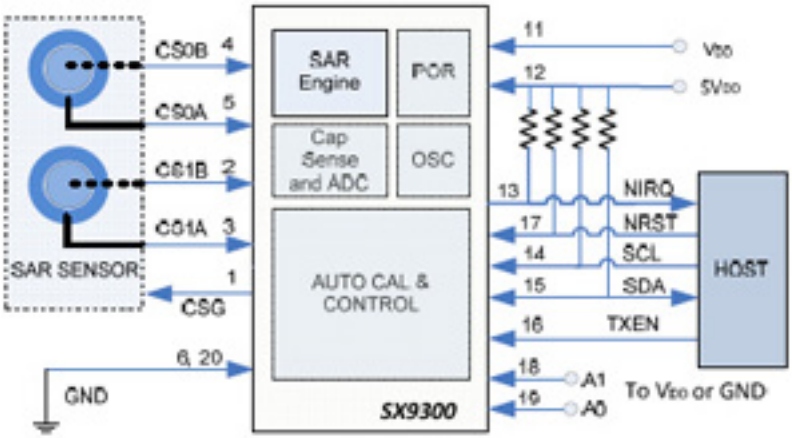

Semtech Corporation today announced the SX9300 [1], an ultra-low power capacitive proximity sensor [2] with on-chip Specific Absorption Rate (SAR) engine for human body detection. Semtech is the first to provide a robust and cost effective proximity sensor with true discrimination between a human body and inert material. This unique feature enables mobile and tablet PC manufacturers to comply with SAR regulation for optimized data & voice communication quality of service.

The SX9300 platform is part of Semtech's touch Interface family. This high sensitivity-sensing device features a dual-channel design with built-in human body discrimination on two distinct sets of sensors. This configuration is optimized for multiple axis proximity detection with very tiny sensor areas. SX9300 is intended for handheld connectivity devices requiring SAR regulation compliance such as mobile and tablet PC devices with 3G/4G/WCDMA mobile connectivity and Wi-Fi/mobile hotspots.

"Semtech is positioning its touch Interface products within the fast growing markets of handheld connected devices. Users expect continuous wireless connectivity; still the population is concerned by limiting radio energy absorption in the body. Controlling such radio energy requires human body proximity detection" said Marc Pegulu, Senior Marketing Director for Wireless and Sensing at Semtech. "Unlike other capacitive proximity solutions, Semtech offers a very reliable discrimination in detecting a human body versus an object. Our solution not only offers our customers products a compliancy to health & safety regulations, but it also enables optimum wireless connectivity experience to the user".

The SX9300 is offered in a space-saving 3mm x 3mm thin 20-QFN package. Semtech provides a variety of small form factor sensor reference designs especially adapted to tablet PCs. Semtech guarantees all of these devices to operate over the extended (-40°C to +85°C) temperature range.

While these products offer designers the benefit of significant board space savings, their small size and RoHS & WEEE compliance also contributes to energy

conservation and hazardous waste reduction.

Key Features of the SX9300

- Low-power operation
  - 2.7V to 5.5V voltage operating range
  - Doze Mode: 18uA
  - Active Mode: 170uA
  - Sleep Mode: 2.5uA
- Dual SAR capacitive sensor inputs with body versus inanimate object detection
- Programmable proximity short-range detection
- Ultra small footprint of 3mm x 3mm thin 20-QFN package
- 400kHz I^2C interface and dedicated interrupt pin

Applications

- SAR Compliant Systems
- Tablet PC/e-book
- Portable Gaming Devices
- Notebooks
- Mobile Phones
- Mobile Hotspots

Pricing and availability

The SX9300 is available in production quantities and is priced at $0.56 each in 10,000-piece lots. Contact Semtech for complete pricing details. Semtech offers comprehensive design assistance, including field- and factory-based support. Data sheets, volume pricing and delivery quotes, as well as evaluation kits and samples, are available by contacting www.semtech.com/info [3].

Source URL (retrieved on *06/20/2013 - 6:06am*):
http://www.ecnmag.com/products/2012/07/proximity-sensor-enables-human-body-detection?qt-video_of_the_day=0

Links:
[1] http://www.semtech.com/apps/filedown/down.php?file=sx9300.pdf
[2] http://www.semtech.com/touch-interface/capacitive-touch-controllers/index.html
[3] http://cts.businesswire.com/ct/CT?id=smartlink&url=http%3A%2F%2Fwww.semtech.com%2Finfo&esheet=50038312&lan=en-US&anchor=www.semtech.com%2Finfo&index=13&md5=eb6fca79be5d74f56178da3356cd3a6c