Dual Output Synchronous Step-Down Controller Produces 1.5VOUT From Up To 24VIN at 2MH

MILPITAS, CA – November 14, 2011 – Linear Technology Corporation introduces the LTC3838, a high frequency controlled on-time dual output synchronous step-down DC/DC controller with differential output voltage sensing and clock synchronization. The controlled on-time, valley current-mode architecture enables a very fast transient response by increasing its operating frequency during a transient event, enabling the LTC3838 to recover from a large load step in only a few clock cycles. The operating frequency is selectable from 200kHz to 2MHz or can be synchronized to an external clock. A low 30ns minimum on-time allows for a high step-down ratio power supply at very high operating frequencies.

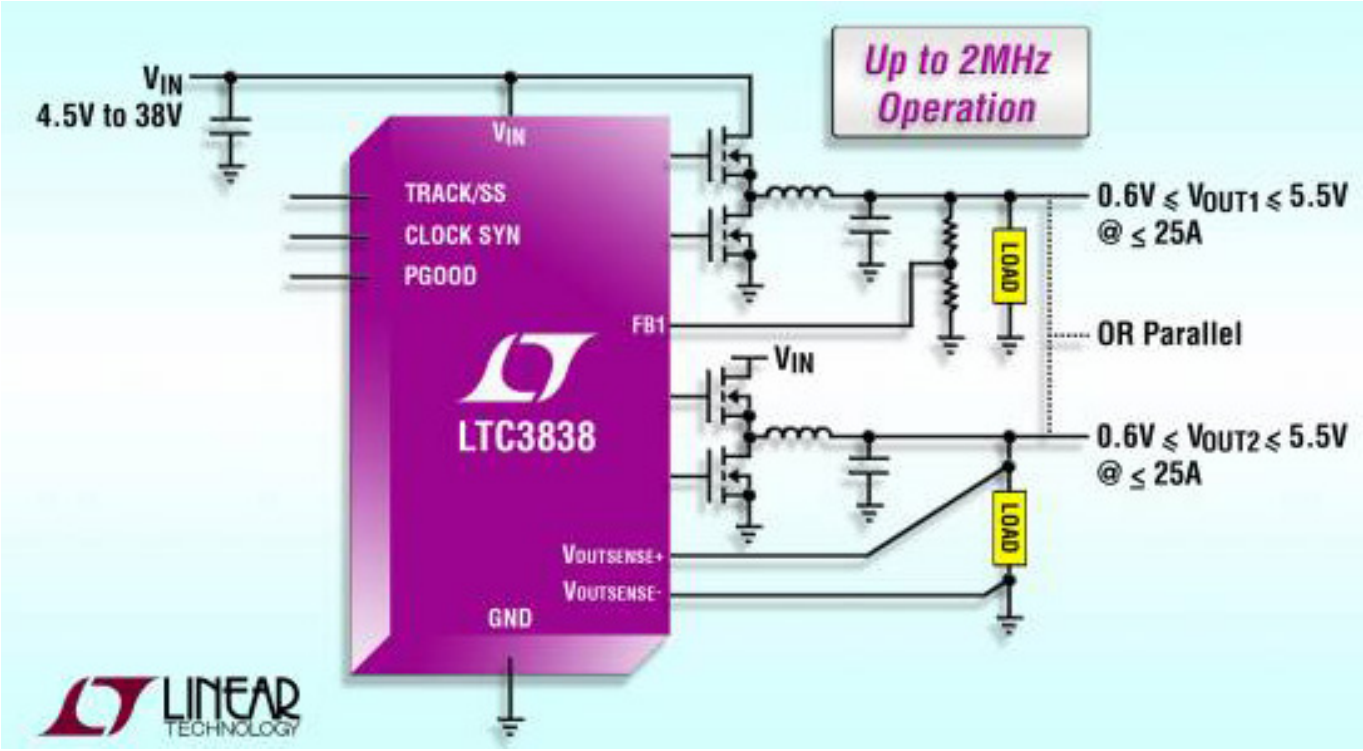

The LTC3838 operates over a 4.5V to 38V input voltage range, encompassing a wide variety of applications including most intermediate bus voltages. Strong onboard N-channel MOSFET gate drivers allow the use of high power external MOSFETs for output currents up to 25A per channel, at output voltages ranging from 0.6V to 5.5V, making it ideal for point-of-load requirements. The LTC3838's differential amplifier provides true remote output voltage sensing of both the positive and negative terminals, enabling high accuracy regulation independent of board IR losses (up to ±500mV). The output current is monitored by sensing the voltage drop across the output inductor (DCR) for highest efficiency or by using a sense resistor for extra precision. Additional features include an onboard bias voltage LDO, soft-start or tracking, adjustable current limit, overvoltage protection,

current limit foldback and external VCC control.

The LTC3838 offers superior total regulation accuracy and is specified to account for all error sources including line, load and differential sensing. The LTC3838 total differential output voltage accuracy is +/-0.25% at 25°C, +/-0.67% from 0°C to 85°C and ±1% maximum DC error over the full -40°C to 125°C operating junction temperature range. The LTC3838 is available in thermally enhanced 5mm x 7mm QFN-38 or TSSOP-38 packages. The 1,000-piece price starts at $3.18 each. For more information, visit www.linear.com/product/LTC3838 [1].

Summary of Features: LTC3838

• Controlled On-Time, Valley
• Current-Mode Control for Very Fast Transient Response
• Differential Amplifier for Remote Output Voltage Sensing
• Programmable Operating Frequency from 200kHz to 2MHz, Synchronizable to an External Clock
• Wide VIN Range: 4.5V to 38V
• VOUT Range: 0.6V to 5.5V
• High Step-Down Ratio: 30ns Minimum On-Time
• ±0.67% Output Voltage Accuracy over Temperature RSENSE or DCR Current Sensing
• Output Voltage Tracking or Programmable Soft Start
• Adjustable Current Limit
• Overvoltage Protection
• Foldback Current Limit

Source URL (retrieved on *06/19/2013 - 9:25pm*):
http://www.ecnmag.com/products/2011/11/dual-output-synchronous-step-down-controller-produces-15vout-24vin-2mh

Links:
[1] http://www.linear.com/product/LTC3838