Low-Power, Small Form Factor Op Amps From Microchip

Microchip Technology Inc., a leading provider of microcontroller, analog and Flash-IP solutions, today announced the MCP6401/2/4 Operational Amplifiers (Op Amps), which add to Microchip's general-purpose op amp portfolio by providing lower power consumption in small packages. Featuring quiescent current of just 45 microamperes with a Gain Bandwidth Product (GBWP) of 1 MHz, the MCP6401/2/4 op amps complement Microchip's eXtreme Low Power PIC® microcontrollers (MCUs), helping to extend battery life in a variety of consumer (e.g., music players, appliances and gaming consoles); industrial (e.g., barcode scanners and gas meters); automotive (e.g., signal conditioning for proximity and tire-pressure-measurement sensors); and medical applications (e.g., glucometers and portable patient-monitoring devices), among others.

Additional features include a maximum offset voltage of +/-4.5 mV and a supply-voltage range of 1.8V to 6V over the extended temperature range of - 40ºC to + 125ºC. The op amps are unity gain stable and feature Rail-to-Rail Input and Output operation, for better performance across the entire voltage range.

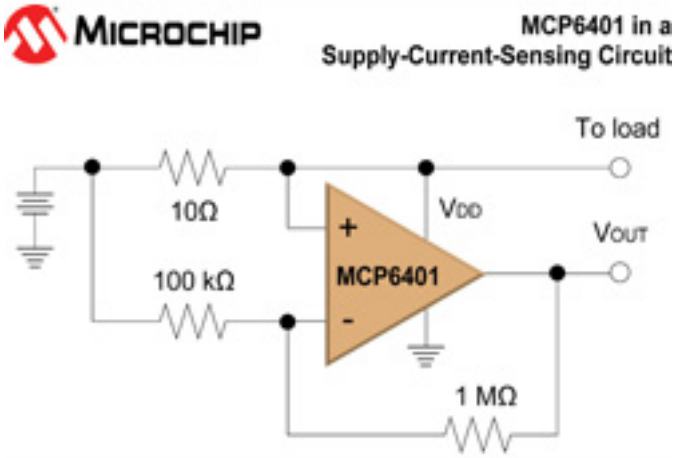

"Customers often cite low current consumption and small form factor as being the most important requirements, when designing battery-powered, portable and other applications," said Bryan J. Liddiard, vice president of marketing with Microchip's Analog and Interface Products Division. "The MCP6401/2/4 op amps address both of these needs, reinforcing Microchip's leadership as the low-power analog product supplier."

- more -

Namrata Pandya, product marketing engineer with Microchip's Analog and Interface Products Division, continued, "With advantages such as the low operating voltage range and low power consumption in space-saving packages, the MCP6401/2/4 op amps provide a good cost-to-performance ratio, while helping system engineers meet tight power budgets and save valuable board space."

Development Support

PCB footprints and schematic symbols are expected to be available in September 2010 from Microchip's Web site, at http://www.microchip.com/get/G98J. The downloads will be available in a neutral format that can be exported to the leading EDA CAD/CAE design tools, using the Ultra Librarian Reader from Accelerated Designs Incorporated. The op amps are also supported by Microchip's Active Filter Demo Board Kit (part # MCP6XXXDM-FLTR, $65.00) and MCP6XXX evaluation boards (part #s MCP6XXXEV-AMP1, MCP6XXXEV-AMP2, MCP6XXXEV-AMP3, MCP6XXXEV-AMP4, respectively). All four of these boards are priced at $30.00 each and can be purchased at microchipDIRECT (http://www.microchip.com/get/XJ8S), today.

Source URL (retrieved on *03/13/2014 - 10:20pm*):
http://www.ecnmag.com/products/2010/08/low-power-small-form-factor-op-amps-microchip