Multiplexer Integrates Redrive Circuitry to Maintain Signal Integrity

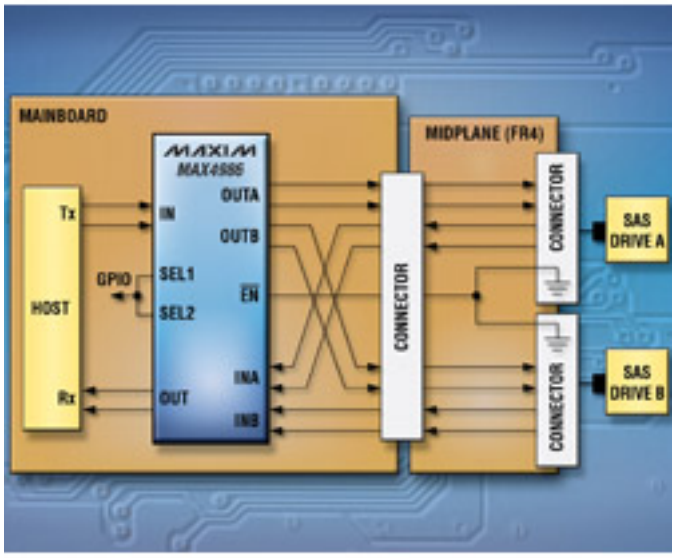

Maxim Integrated Products introduces the MAX4986, a 2:1/1:2 active multiplexer designed to switch and redrive SAS/SATA signals from one source to one of two destinations. This device integrates four programmable signal-amplitude buffers to protect against unwanted noise at the output. To further preserve signal integrity, the MAX4986 features programmable input equalization and programmable output preemphasis to compensate for circuit board loss. Capable of switching and redriving signals at SAS/SATA 6Gbps data rates, the MAX4986 is ideal for workstations and servers that must carry signals through connectors and over long cables, stripline, and microstrip while maintaining signal integrity throughout the system.

The MAX4986 supports SAS/SATA out-of-band (OOB) signaling by using high-speed amplitude detection on the inputs and amplitude squelch on the corresponding outputs. Input signals less than the user-selected OOB threshold are detected as off and not passed to the output. This approach prevents the system from responding to unwanted noise, while still allowing OOB signals to transmit through the redriver. To reduce power consumption, the MAX4986 features an enable pin that places the device in standby mode when it is driven low or left unconnected.

The MAX4986 operates from a single 3.3V supply, and is fully specified over the 0 degrees Celsius to +70 degrees Celsius commercial temperature range. It is available in a small, 3.5mm x 9mm, 42-pin TQFN package. Prices start at $7.00 (1000-up, FOB USA).

Maxim Integrated Products is a publicly traded company that designs, manufactures, and sells high-performance semiconductor products. The Company

was founded over 25 years ago with the mission to deliver innovative analog and mixed-signal engineering solutions that add value to its customers' products. To date, it has developed over 6300 products serving the industrial, communications, consumer, and computing markets.

Maxim reported revenue in excess of $1.6 billion for fiscal 2009. A Fortune 1000 company, Maxim is included in the Nasdaq 100, the Russell 1000, and the MSCI USA indices. For more information, go to www.maxim-ic.com [1].

Source URL (retrieved on *10/25/2014 - 11:00pm*):
http://www.ecnmag.com/products/2010/05/multiplexer-integrates-redrive-circuitry-maintain-signal-integrity

Links:
[1] http://www.maxim-ic.com