Discrete-to-digital sensing IC includes built-in lightning protection

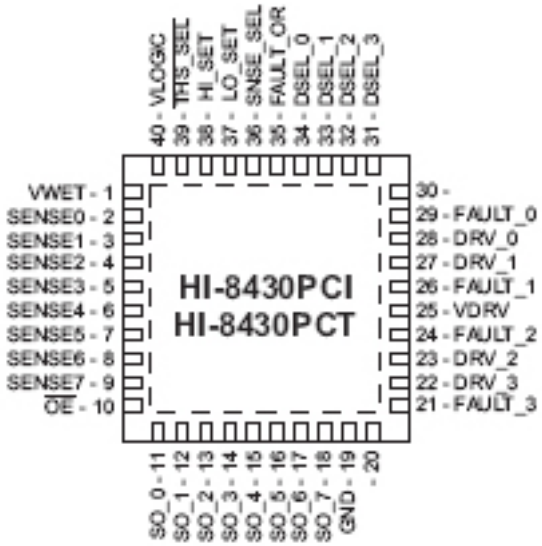

Holt Integrated Circuits today announced the introduction of HI-8430 [1], a new 3.3V octal discrete-to-digital sensing IC with quad high-side drivers and built-in lightning protection. The device is also fully compliant to Airbus ABD0100H.

The eight sensing channels may be configured to detect either GND/Open or 28V/Open, with programmable thresholds and hysteresis. The device operates from a 3.0V to 5.5V supply with sense detection levels from 2V to 21V. In addition, four high-side output drivers are capable of driving 200mA loads. Each individual driver has over-current shutdown protection, with fault detection signaled on external pins.

This type of device may be used in a multitude of aircraft sensing applications, such as “hatch open” and “wheels up” indicators. The built-in driver outputs are ideal for driving relays or display panel warning lights.

[1] “This product provides customers with a flexible, easy-to-use solution for analog voltage sensing and high-side driver applications,” said Anthony Murray, Director of Business Development at Holt. “The broad functionality and on-chip lightning protection result in an unprecedented component-count reduction, giving customers the most robust, cost effective solution on the market today.”

The HI-8431 [1] is a more compact version of the HI-8430, with the same functionality minus individual fault detection pins. Fault detection is still functionally realized in the HI-8431 using a single-pin combined ORed output.

The devices are available in industrial −40°C to +85°C and extended −55°C to +125°C temperature ranges and come in multiple standard package options, including 44-pin PQFQ and compact 40-pin or 32-pin QFNs.

www.holtic.com [2].

Source URL (retrieved on *09/15/2014 - 10:23pm*):
http://www.ecnmag.com/product-releases/2012/10/discrete-digital-sensing-ic-includes-built-lightning-protection?qt-most_popular=0

Links:
[1] http://www.holtic.com/pr1012a.html
[2] http://www.holtic.com/pr1012b.html