Evaluation module demonstrates the receiver portion of the bqTESLA wireless power system

The bq51013AEVM-764 evaluation module (EVM) demonstrates the receiver portion of the bqTESLA wireless power system. This receiver EVM is a complete receiver-side solution that produces 5 V out at up to 1 A when coupled with the bqTESLA transmitter. The bq51013AEVM-764 device shown on this EVM along with external components that support the device for a complete solution.

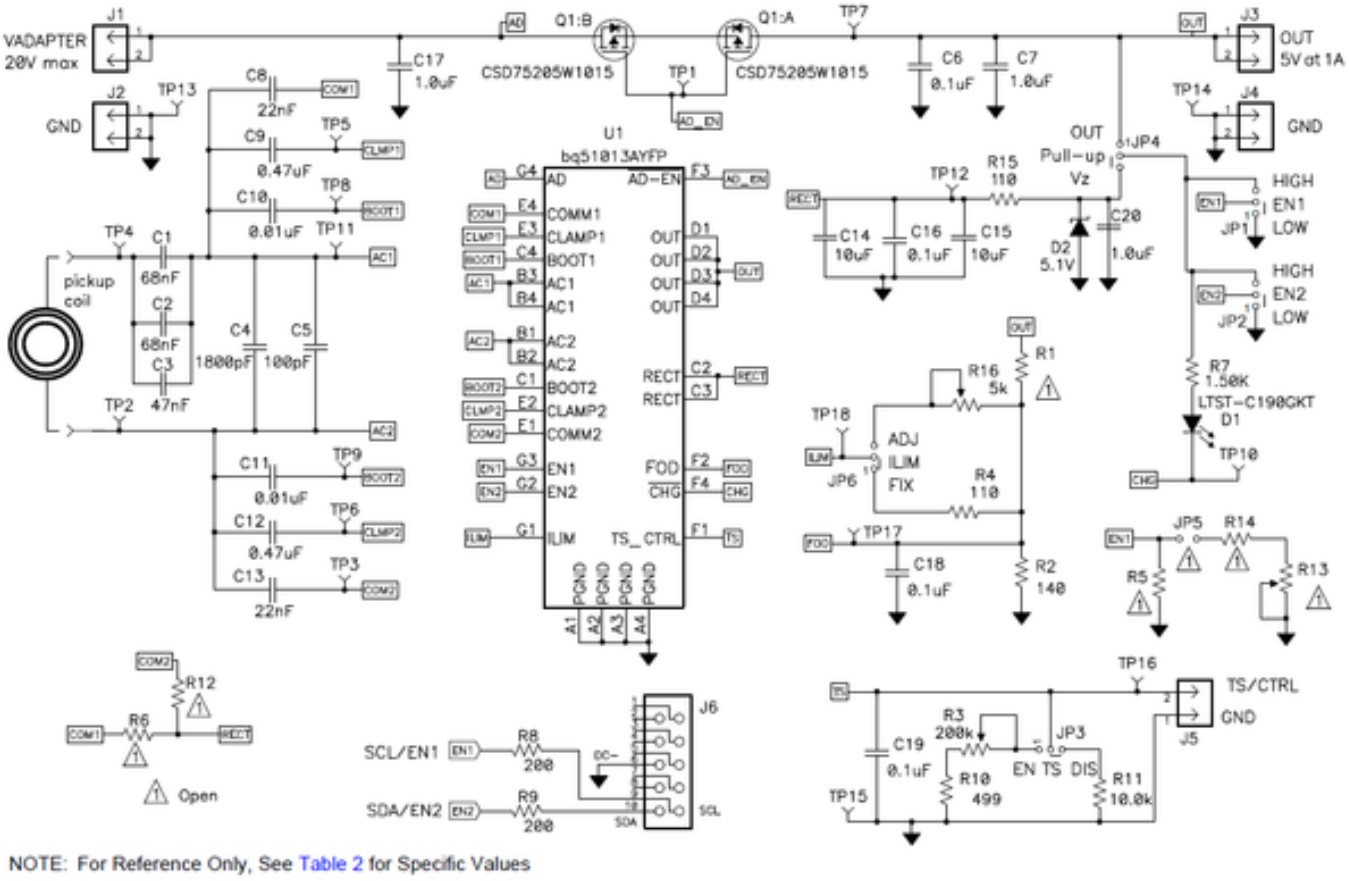

Figure 1. HPA764AEVM Schematic

- The bqTESLA receiver can be used in any number of low-power battery portable devices as a power source for charging.
- Output voltage of 5 V up to 1 A
- External adapter switchover and control circuit
- Low-profile, external pick-up coil
- Frame is configured to provide correct receiver to transmitter spacing.
- Room above coil for testing with battery, key for tuning
- Adjustable resistor R16 can be used to set max output current

Manufacturer	Texas Instruments [1]
Category	Power Management
Sub-Category	Inductive Charging / Wireless Power
Eval Board Part Number	296-30563-ND
Eval Board Supplier	Texas Instruments [2]
Eval Board	Normally In Stock
Voltage In	4 ~ 20 V
Voltage Out	5 V
Current Out	1 A
Efficiency @ Conditions	>74%, 19V in, 5V @ 2.5 ~ 5 W Out
Features	Shutdown, Enable, Standby
Frequency	110 ~ 205 kHz
No-load Input Power @ Conditions	- Not given
Component Count + Extras	35 + 32
Design Author	Texas Instruments

Source URL (retrieved on *12/09/2013 - 8:53am*):
http://www.ecnmag.com/product-releases/2012/09/evaluation-module-demonstrates-receiver-portion-bqtesla-wireless-power-system?qt-video_of_the_day=0

Links:
[1] http://www.digikey.com/Suppliers/us/Texas-Instruments.page
[2] http://digikey.com/Suppliers/us/Texas-Instruments.page?lang=en