Low noise amplifier designed for 470MHz~880MHz bandwidths of terrestrial digital TV

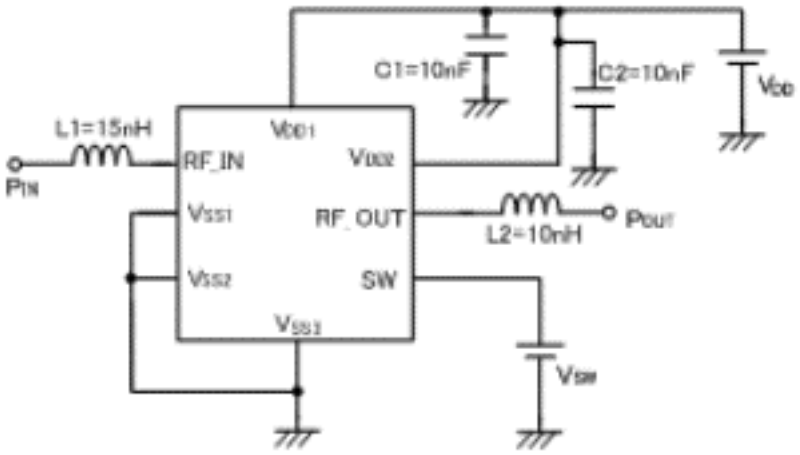

TOREX SEMICONDUCTOR LTD. has developed a low noise amplifier in CMOS process aimed at the 470MHz~880MHz bandwidths of terrestrial digital TV. The new XC2402 from Torex is a low noise amplifier in CMOS process aimed at the 470MHz~880MHz bandwidths of terrestrial digital TV.

Applying a logic signal at the SW pin permits to select between High Gain and Low Gain modes.
In High Gain mode, the XC2402 combines a high gain of 15dB with a low noise figure of 1.3dB. Moreover, thanks both to its very low operating voltage of 1.2V –a feat permitted by the use of a CMOS process- and to its frugal current consumption, the XC2402 consumes as little as 9.4mW in this mode.
If the high gain of the XC2402 is temporarily not required, the XC2402 can be switched to Low Gain mode. In that case, its power consumption decreases to a minuscule 3.5µW, while the loss through its bypass circuit is kept at a minimum at 1.4dB.

The XC2402 offers easy input and output matching to 50Ω and can be used with only 4 external components.
Combined with the very small size (1.5 x 1.5 x 0.6mm) of its USP-8A01 package, this makes the XC2402 a perfect fit for space-sensitive applications.

Torex Semiconductor Ltd,
http://www.torex.co.jp/english/products/detail.php?id=480

[1]

Source URL (retrieved on *04/28/2015 - 2:06am*):
http://www.ecnmag.com/product-releases/2012/06/low-noise-amplifier-designed-470mhz880mhz-bandwidths-terrestrial-digital-tv

Links:
[1] http://www.torex.co.jp/english/products/detail.php?id=480