Femtocell transceivers simplify compact radio designs

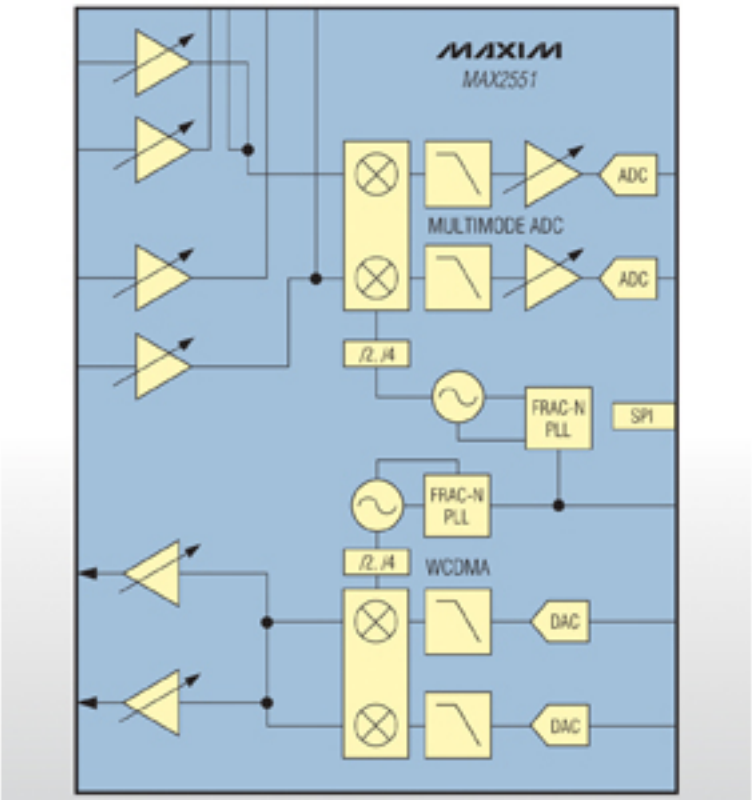

Maxim Integrated Products introduces the MAX2550–MAX2553 [1] femtocell transceivers for WCDMA (Bands 1 to 6 and 8 to 10) and cdma2000 (Band Class 0, 1, and 10).

The amount of data consumed by smartphones is rising and the increase in data transmission requires more base-station cell sites to receive and transmit the signals. With existing base-station cell sites maxed out on capacity, femtocells are becoming a fast-growing market. Carriers are also moving to femtocell transceivers that reside in a home or office and essentially provide an indoor base station to handle the cellular voice and data needs of an entire dwelling.

Service providers need more compact, less costly radio designs

·The MAX2550–MAX2553 transceivers reduce the number of external components, lower operation and maintenance costs, and facilitate more compact radio designs for modules and stand-alone femtocell applications.

·The existing large macrocells have higher installation and maintenance costs.

·In many areas, carriers struggle with space constraints and city regulations when they need to install more of these macrocell base stations.

Proven femtocell expertise ensures reliable products

·According to J. Madden, Principal Analyst with Mobile Experts, in 2011 Maxim “was very successful in the first round of 3G femtocell designs, having introduced a good set of transmitter and receiver products early in the design cycle.”*

·Time to market and ease of design are greatly improved by the MAX2550–MAX2553. They have a high level of compatibility with market-leading baseband providers.

Interface, temperature, and packaging

·A MAX-PHY digital interface eliminates the additional cost and space typically incurred with external data converters.

·The MAX2550–MAX2553 are offered in a 7mm x 7mm TQFN package.

·These transceivers are rated over the -40°C to +85°C temperature range.

For more information please visit www.maxim-ic.com/Femtocells [2].

Source URL (retrieved on *05/06/2015 - 12:34am*):
http://www.ecnmag.com/product-releases/2012/05/femtocell-transceivers-simplify-compact-radio-designs

Links:
[1] http://www.maxim-ic.com/MAX2551
[2] http://www.maxim-ic.com/Femtocells