Hall Sensor Provides True 3-axis Differential Measurement

austriamicrosystems, a leading global designer and manufacturer of high performance analog ICs, announces the AS540x product family of 3-dimensional Hall encoders. The new 3D Hall element provides absolute and highest resolution with angular or linear output data. This new flexibility enables new solutions with improved performance for industrial and automotive applications. The AS540x Hall sensor series was developed in cooperation with Fraunhofer Institute for Integrated Circuits IIS in Germany - license holder of the HallinOne technology.

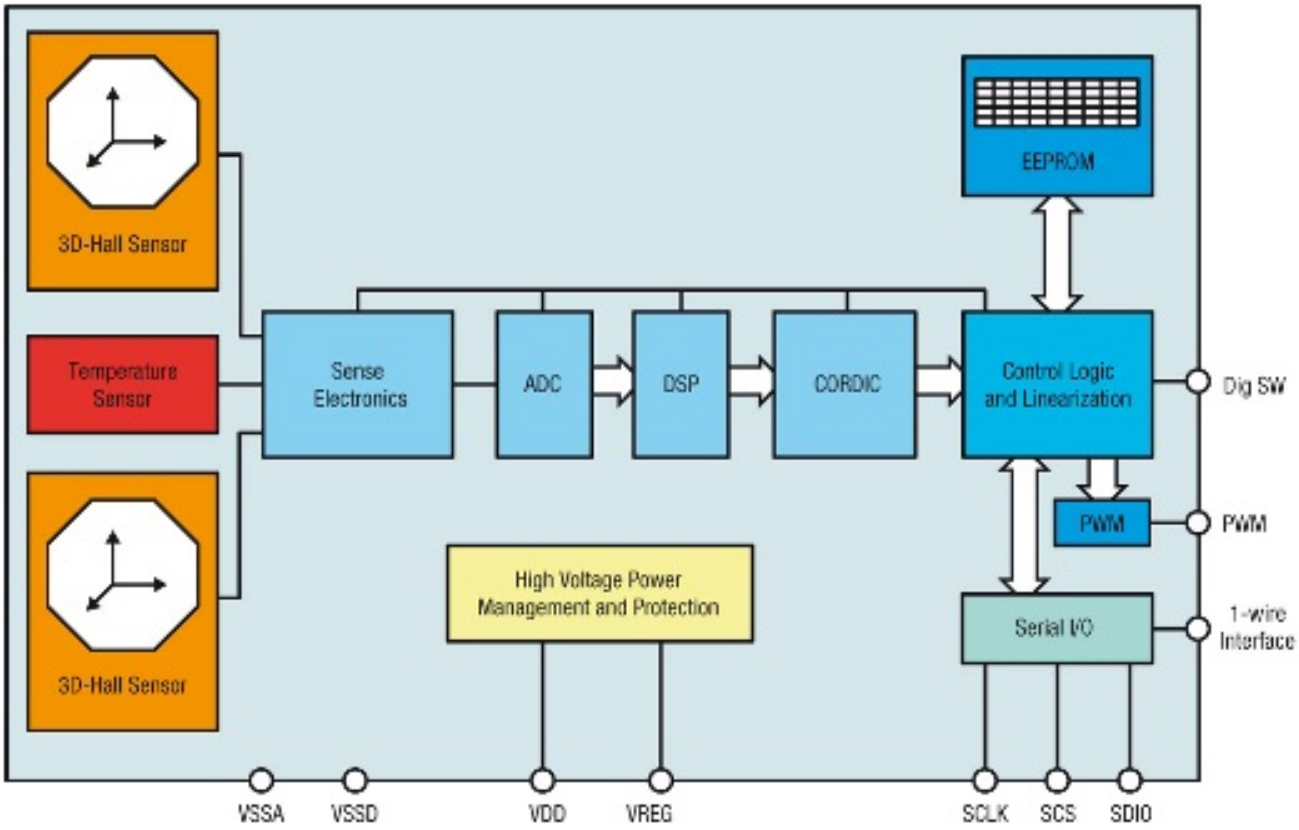

austriamicrosystems AS540x series uses two “pixel-cells” in a differential mode to guarantee robustness against all possible external influences like magnetic stray fields. In addition, the IC contains an EEPROM to give maximum freedom to system designers when programming and linearizing the IC.

“The strength of this technology is the true 3D measurement of magnetic field components. Accurately calibrated lateral and vertical Hall sensors are used to increase the overall performance. By using two 3D pixels cells in a differential measurement approach, the absolute linear position measurement range is extended to 40 mm. If we are talking about challenging automotive and industrial

position sensing requirements in harsh environments, the AS540x Hall encoder family is currently the best way to go," stated Marcel Urban, Product Manager Magnetic Encoders at austriamicrosystems.

"The HallinOne technology has proven its maturity in high-volume ASIC-based applications. The standard products commonly developed with austriamicrosystems will open this technology for robust and innovative position sensing applications to those customers who are not willing to develop their own ASIC," said Josef Sauerer, head of analog and mixed signal IC Design at Fraunhofer IIS.

By using a simple two pole magnet, the absolute position information of the magnet is directly accessible over a SPI interface for module or as a PWM interface for remote applications. The AS540x magnetic encoder series is operational over an ambient temperature range from -40°C up to 150°C and operates either up to 18V for the automotive or 3V supply voltage for the industry applications. The AS540x family will be available in a small lead-free TSSOP package. austriamicrosystems is developing a portfolio of 3D Hall products for automotive and industrial applications.

The first 3D Hall product AS5401 for industrial applications will be launched in Q1 / 2011, samples of the automotive version with implemented high voltage diagnostic features will be available soon.

For product specific information on the 3D Hall encoder, to download data sheets or to request free samples from austriamicrosystems' online shop ICdirect, please visit www.austriamicrosystems.com/3D-HallinOne [1] .

For more information on the AS540x magnetic encoder series, visit www.austriamicrosystems.com/3D-Hall-sensor/AS5400 [2]

For more information, visit www.austriamicrosystems.com [3]

Source URL (retrieved on *05/25/2013 - 3:43am*):
http://www.ecnmag.com/product-releases/2010/11/hall-sensor-provides-true-3-axis-differential-measurement

Links:
[1] http://www.austriamicrosystems.com/3D-HallinOne
[2] http://www.austriamicrosystems.com/3D-Hall-sensor/AS5400
[3] http://www.austriamicrosystems.com/