# Haydon Kerk Introduces Fully Configurable CAD Models

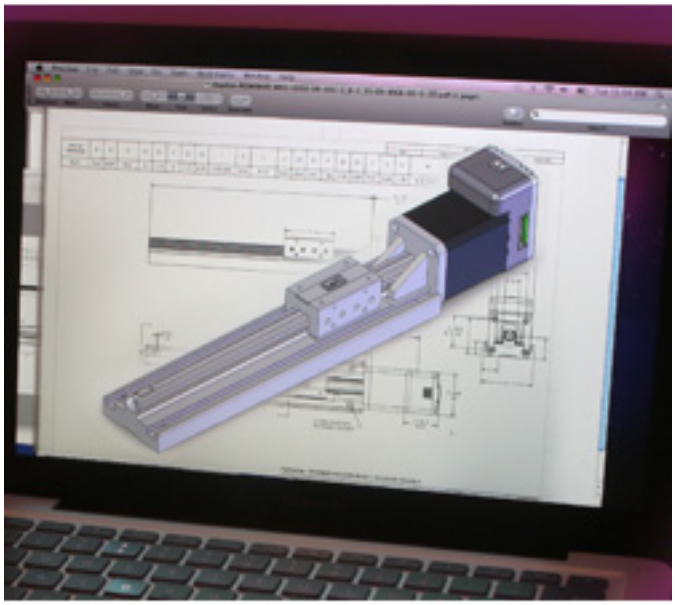

Haydon Kerk Motion Solutions offers customers the ability to configure and download CAD models of the entire line of Kerk RGS linear rail systems. CAD download availability includes both motorized and non-motorized linear rail systems with the flexibility to change/modify such features as rail length, number of carriages, screw resolution, motor step angle, motor voltage, and other parameters. Users can also add an optional IDEA integrated programmable drive system to several linear rail configurations. Although there are well over 10,000 possible linear rail configurations available through the online CAD system, Haydon Kerk will customize any system for application-specific needs.

All RGS linear rail systems feature standard wear-compensating, anti-backlash driven carriages to insure repeatable and accurate positioning. All moving surfaces include Kerkite engineered polymers running on Kerkote TFE coating, providing a strong, stable platform for a variety of linear motion applications. RGS linear rails are available with screw leads ranging from 0.025” to 2.0”. When combined with optional Haydon motors, the RGS linear rail systems provide linear travel resolution ranging from 0.0000625” per step to 0.010” per step.

By combining multiple technologies into a single linear rail assembly, Haydon Kerk is able to improve system integration for the equipment OEM or end user. The overall cost for the customer is also lowered by simplifying product development with fewer components required.

Applications for RGS linear rail systems include life science equipment, laboratory instrumentation, semiconductor processing equipment, and various other applications requiring precision linear motion.

For more product information and CAD links, go to www.HaydonKerk.com [1] or to speak with an engineer to discuss a specific application, contact Haydon Kerk at 203-756-7441.

**Source URL (retrieved on *05/23/2013 - 4:04pm*):**
http://www.ecnmag.com/product-releases/2010/07/haydon-kerk-introduces-fully-configurable-cad-models

**Links:**
[1] http://www.HaydonKerk.com