Microcontrollers Integrate USB and RAM

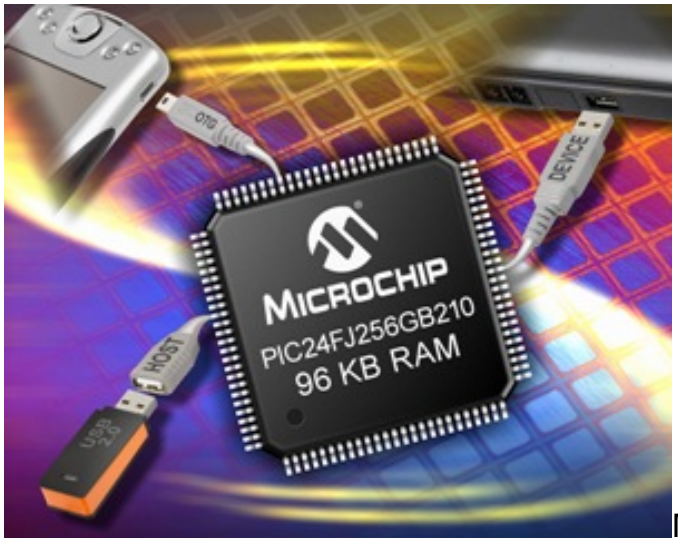

Microchip Technology, a leading provider of microcontroller, analog and Flash-IP solutions, announced the four-member PIC24FJ256GB210 microcontroller family, which integrates USB for Embedded Host/Peripheral/On-the-Go and 96 Kbytes of RAM. This large RAM enables the buffering of sizeable amounts of data and better overall throughput, for applications such as Ethernet connectivity, remote sensing, data logging and audio streaming. It can also be used to store generated images or data for dynamic content, such as real-time, remote sensor data graphs. In combination with Microchip's free USB software library and TCP/IP stack, these MCUs lower system costs and footprints in a broad range of industrial, instrumentation/measurement, medical and consumer applications.

The requirements for embedded designs are rapidly expanding, including the widespread and growing adoption of connectivity and the ability to buffer large amounts of data. At the same time, the pressure to reduce cost and size is constant. Microchip integrates a USB peripheral and large amounts of RAM into a single microcontroller as small as 64 pins, along with Peripheral Pin Select to provide designers the flexibility to remap digital I/O pins. Additional peripherals include 24 channels of mTouch™ capacitive touch sensing, along with a free touch software library, and the 16-bit Enhanced Parallel Master/Slave Port, which enables wider peripheral selection and improved bandwidth when connecting to off-chip resources.

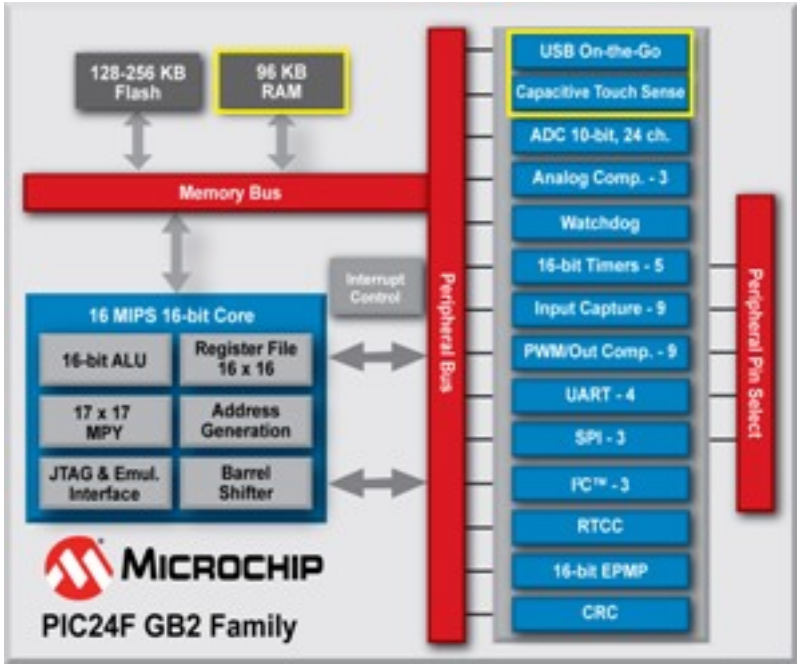

“Microchip doesn’t stop at providing embedded designers with high levels of microcontroller integration and performance—we also help them get to market quickly via industry-leading software support and configuration tools, training and development boards,” said Mitch Obolsky, vice president of Microchip’s Advanced Microcontroller Architecture Division. “Maximum flexibility is ensured by Microchip’s unparalleled migration strategy, which allows designers to move among our large portfolio of 8/16/32-bit PIC microcontrollers through code compatibility and one universal MPLAB® integrated development environment.”

Development Tools
This new microcontroller family easily integrates into Microchip’s long-standing, modular development-board system. A new $25 PIC24FJ256GB210 Plug-in Module (part # MA240021) is available today, which readily connects to the proven Explorer 16 Modular Development Board and its companion USB PICtail™ Plus daughter card. For more information on these development boards, along with a repository of free software and other design aids, please visit Microchip’s online USB Design Center at http://www.microchip.com/get/BTM5 [1].

Pricing and Availability
All four members of the PIC24FJ256GB210 16-bit microcontroller family are available today for general sampling and volume production, starting at $4.10 each in 10,000-unit quantities. The PIC24FJ128GB206 and PIC24FJ256GB206 come in 64-pin TQFP and QFN packages, while the PIC24FJ128GB210 and PIC24FJ256GB210 are available in 100-pin TQFP and 121-pin BGA packages.

For additional information, contact any Microchip sales representative or authorized worldwide distributor, or visit Microchip’s Web site at http://www.microchip.com/get/XBFC [2].

For more information, visit the Microchip website at http://www.microchip.com/get/TNT7 [3].

###

Source URL (retrieved on *12/22/2013 - 8:43am*):
http://www.ecnmag.com/product-releases/2010/06/microcontrollers-integrate-usb-and-ram

Links:
[1] http://www.microchip.com/get/BTM5
[2] http://www.microchip.com/get/XBFC
[3] http://www.microchip.com/get/TNT7