High-Stability Oscillator Can Replace Crystal Oscillators

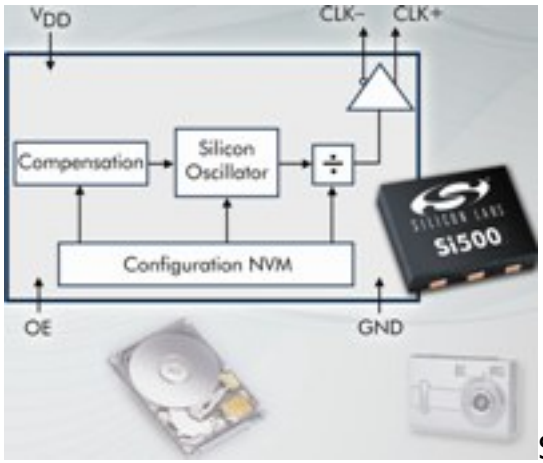

Silicon Laboratories entered the consumer timing market with its 100 percent CMOS oscillator suited for consumer applications. By completely eliminating the quartz resonator that must be cut and tuned for each crystal oscillator (XO) frequency, the Si500 helps enable extremely short lead times. The ultra-low phase noise silicon oscillator supports a wide frequency range, generating any output clock frequency from 0.9 MHz to 200 MHz. Using mixed-signal analog circuitry, the oscillator is compensated for frequency variation due to operating temperature range, initial frequency accuracy, supply voltage change and output load change. The Si500 is presented as the industry's first silicon oscillator that provides temperature stability on par with crystal oscillators. The product family supports frequency stability options ranging from ±100 ppm to ±150 ppm, providing customers reliable operation and drop-in compatibility with quartz-based oscillators. Because the Si500 eliminates the mechanical resonator used for frequency generation, it provides high immunity to the shock and vibration. The Si500 supports differential clock outputs (LVPECL, LVDS, HCSL) in addition to CMOS and SSTL formats, and it supports a dual output CMOS format mode in which a single device can produce two output clocks at the same frequency, eliminating the need for external clock buffers.

Silicon Laboratories
877-444-3032, www.silabs.com [1]

Source URL (retrieved on *07/22/2014 - 12:12pm*):
http://www.ecnmag.com/product-releases/2008/09/high-stability-oscillator-can-replace-crystal-oscillators?qt-video_of_the_day=0&qt-recent_content=0

Links:
[1] http://www.silabs.com/