Dual 16-bit Current Output DAC Provides Six Unique Software Programmable Output Ranges

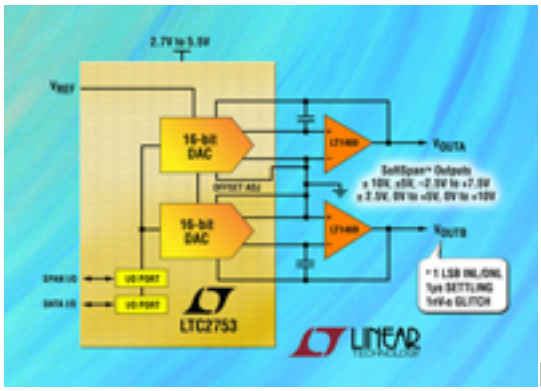

Linear Technology introduced the LTC2753-16, a capable of outputting six unique software-programmable SoftSpan unipolar and bipolar output ranges up to ±10V. Software programmability is said to eliminate the need for precision resistors, gain stages and switching jumpers by hand. The DAC offers accurate DC specifications, including ±1LSB (max) INL and DNL over the -40°C to +85°C industrial temperature range. Operating from a single 2.7V to 5.5V supply, this DAC draws a maximum supply current of 1 µA. The six unique SoftSpan output voltage ranges include two unipolar ranges (0V to 5V, 0V to 10V) and four bipolar ranges (±10V, ±5V, ±2.5V, -2.5V to +7.5V). The LTC2753-16 is appropriate for ATE data acquisition modules such as PC/104. The LTC2753-16 also offers a full-scale settling time of 2 µs and low 1 nV•s glitch impulse. Low glitch reduces the transient voltages between code changes in the DAC. Fast settling and low glitch reduce the harmonic distortion, making it possible to produce higher frequency, lower noise output waveforms. The LTC2753-16 uses a bidirectional input/output parallel interface that allows readback of any internal register, as well as the DAC output span setting. Pricing begins at $5.95 each for the LTC2753-12, in 1,000-piece quantities.

Linear Technology
800-454-6327, www.linear.com [1]

Source URL (retrieved on *03/12/2014 - 12:49am*):
http://www.ecnmag.com/product-releases/2007/12/dual-16-bit-current-output-dac-provides-six-unique-software-programmable-output-ranges

Links:
[1] http://www.linear.com/