Ultra-high-speed optical communications link sets new record

EurekAlert!

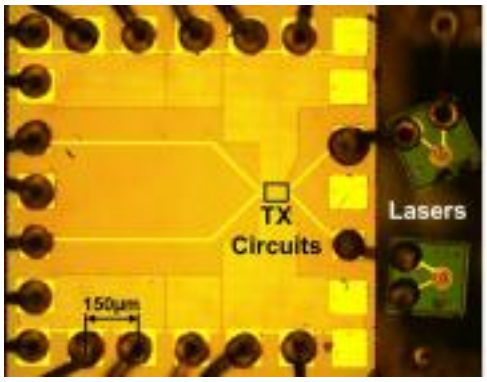

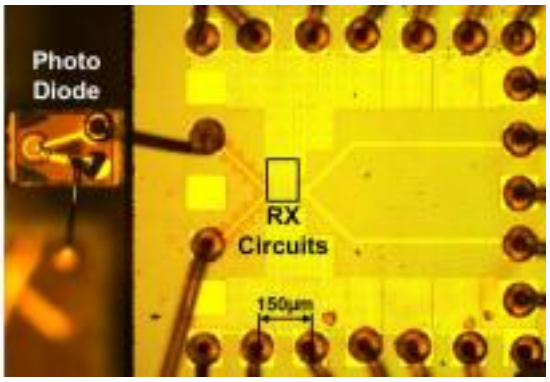

Ultrafast supercomputers that operate at speeds 100 times faster than current systems are now one step closer to reality. A team of IBM researchers working on a U.S. Defense Advanced Research Projects Agency (DARPA)-funded program have found a way to transmit massive amounts of data with unprecedentedly low power consumption.

The team will describe their prototype optical link, which shatters the previous power efficiency record by half at the Optical Fiber Communication Conference and Exposition/National Fiber Optic Engineers Conference (OFC/NFOEC) in Anaheim, Calif. March 17-21.

Scientists predict that the supercomputers of the future—so-called "exascale computers"—will enable them to model the global climate, run molecular-level simulations of entire cells, design nanostructures, and more. "We envision machines reaching the exascale mark around 2020, but a great deal of research must be done to make this possible," says Jonathan E. Proesel, a research staff member at the IBM T. J. Watson Research Center in Yorktown Heights, N.Y. To reach that mark, researchers must develop a way to quickly move massive amounts of data within the supercomputer while keeping power consumption in check.

By combining innovative circuits in IBM's 32-nanometer silicon-on-insulator complementary metal-oxide-semiconductor (SOI CMOS) technology with advanced vertical cavity surface emitting lasers (VCSELs) and photodetectors fabricated by Sumitomo Electric Device Innovations USA (formerly Emcore), Proesel and his colleagues created a power-efficient optical communication link operating at 25 gigabits per second using just 24 milliwatts of total wall-plug power, or 1 pJ/bit. "Compared to our previous work, we have increased the speed by 66 percent while cutting the power in half," Proesel says. "We're continuing the push for lower power and higher speed in optical communications. There will always be demand to move more data with less energy, and that's what we're working toward."

Source: http://www.eurekalert.org/pub_releases/2013-03/tos-uoc031213.php [1]

Source URL (retrieved on *03/15/2014 - 5:31am*):
http://www.ecnmag.com/news/2013/03/ultra-high-speed-optical-communications-link-sets-new-record

Links:
[1] http://www.eurekalert.org/pub_releases/2013-03/tos-uoc031213.php