Maximize shelf life with a one-time, push-button switch

Michael Hartshorne, Texas Instruments

Many modern portable devices must be shipped with a battery installed so that a customer can power it up initially without any battery installation or charging. Any excessive current “leakage” from the components connected to the battery may result in a dead device in the hands of a customer. All components are capable of leakage currents, and while IC’s are the primary culprits, capacitors, board contamination and humidity can have unpredictable levels of leakage.

Solving this problem is not trivial – the maximum shelf-life is achieved when the load is completely disconnected from the battery, however, any power-up detection circuit will need a battery connection to function. PCB area is also critical in many battery-powered applications, making it is difficult to justify space for a single latching switch circuit.

An easy, straightforward approach would be to disconnect the battery with a simple P-type MOSFET (PMOS) and N-type MOSFET (NMOS) latch.

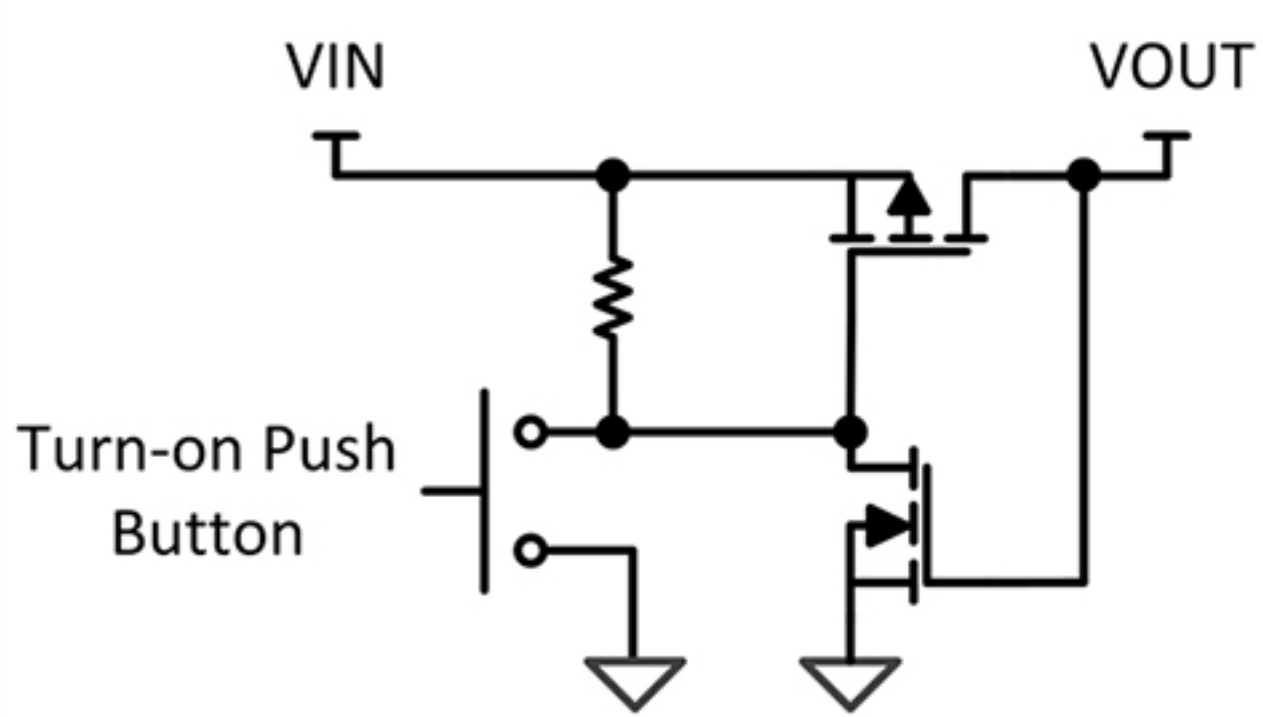

However, this seemingly simple circuit can lead to unreliable performance. Any glitch on the button will turn the latch on. Additionally, the latch may turn itself on when the battery is inserted if the output voltage bounces positive or the capacitive divider created by the CGS of the PMOS and the CDS of the NMOS turns on the PMOS device. Of course this could be fixed by adding some extra resistors and

capacitors, quickly increasing the size and complexity of the design for a very basic function.

A better design is given below which avoids the glitches of the basic latch by enabling the load with a button push of 7.5 seconds, utilizing Texas Instrument's TPS3420 push button controller to turn on the switch.

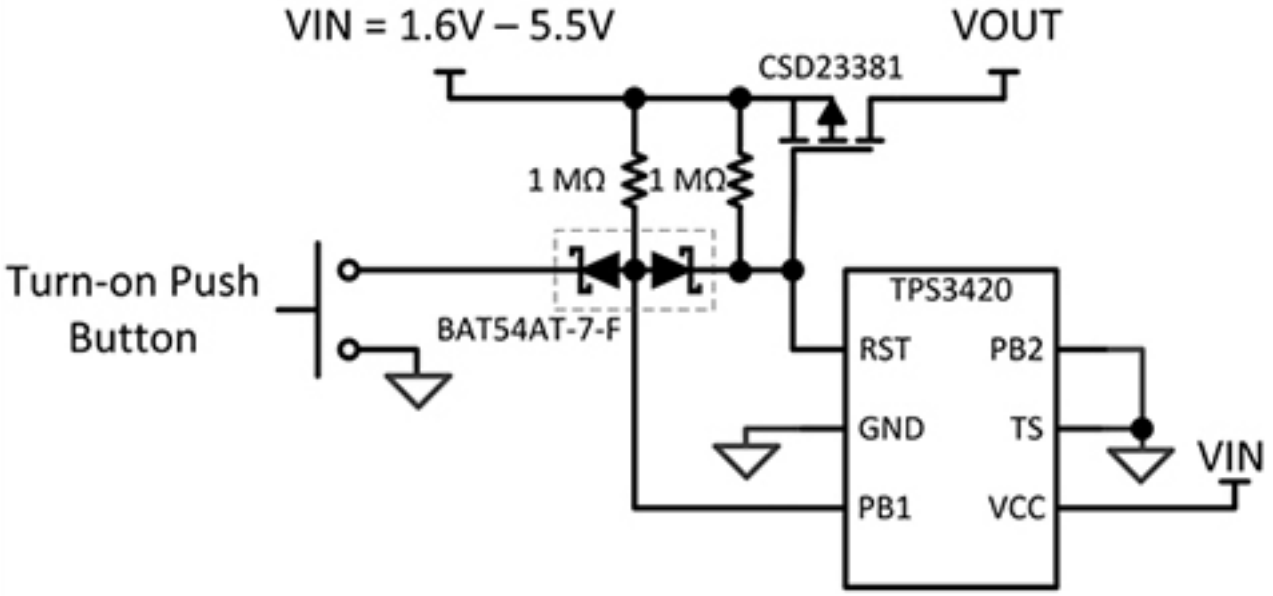

The TPS3420 is an ultra-low Iq push button controller. The TPS3420 has two push button inputs, only one of which is used in this solution. When the button is pushed (any existing button on the system can be used), it connects one half of the dual Shottky diode to ground, which then pulls the PB1 input of the TPS3420 low. After the PB1 input is held low for 7.5 seconds, the open-drain output pin RST of the TPS3420 will pull down on the gate of the PMOS switch, connecting the load to the battery. The other half of the dual Shottky diode will provide a latching mechanism so that when the RST pin goes low, the PB1 pin also stays low, keeping the RST pin low until the battery is completely discharged or removed. This solution uses the tiny CSD23381 (1 mm x 0.6 mm) PMOSFET as a disconnect switch from the battery to the load.

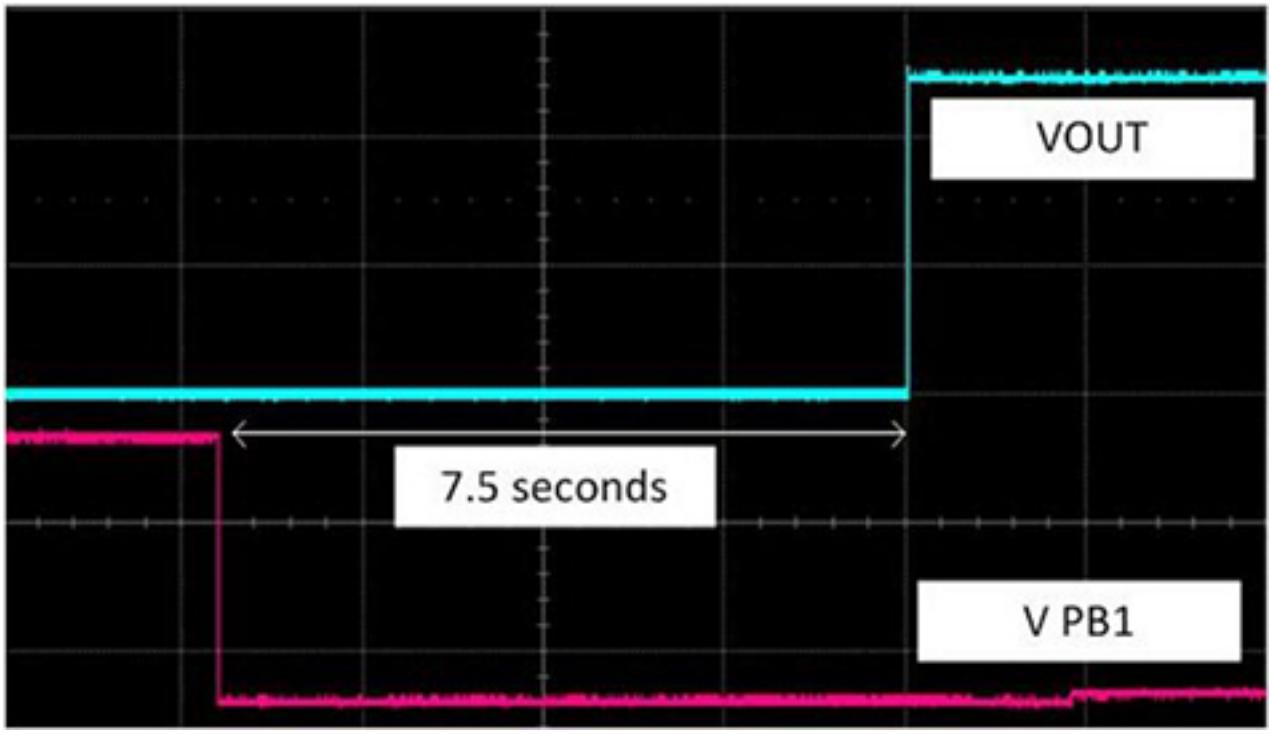

At less than 1 µA of total current consumption when the system is off, this solution can extend the shelf life of any battery for very long periods of time, eliminating the risk of a disappointed customer finding out his/her new device already needs to be charged.

This post originally published on TI's Power House [1] blog.

Source URL (retrieved on *09/23/2014 - 6:39pm*):
http://www.ecnmag.com/blogs/2014/06/maximize-shelf-life-one-time-push-button-switch

Links:
[1] http://e2e.ti.com/blogs_/b/powerhouse/default.aspx?DCMP=powerhouse&HQS=pwr-syndication-ecn-pwrhouse-en