Passively annoying

Screaming Circuits

Passive components can be kind of offensive sometimes. I can understand them in analog circuits or charge pumps. But the fact that we need to put them all over our digital logic is just rude. Technically, I

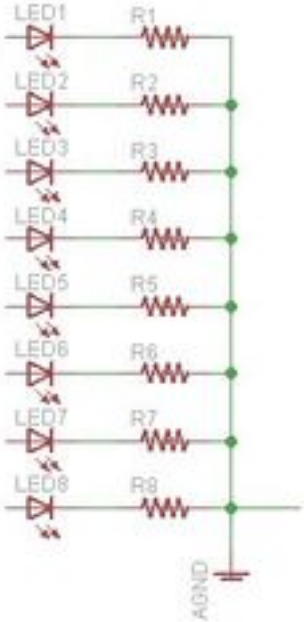

[1]understand why they have to be there, but philosophically, they violate my basic principles of life.

Back in the early days of personal computers, there allegedly was a company that had it's engineers remove bypass caps one by one until the motherboard stopped working. Then they'd add the last one back in and smile about the short-term cost savings. Well, that was a bad idea. The reality is that we need them.

I've written about some of the problems that can show up because of passives (or other small two lead parts like LEDs and other diodes). Like here [2], here [3] and here [4]. That last example has popped up recently and I have some more thoughts on it. Essentially, I'm talking about multiple two-lead components that have one lead tied together. That's a pretty common scenario with bypass caps or LEDs (or the LED current limit resistor).

There are a couple of ways to do this. Some error prone and some not. First, the general rule of thumb for two lead passives is, if at all possible, to have the same amount of copper going into both sides. That means that if you have one 8 mil trace going to one pad, have one 8 mil trace going to the other. Also make sure that you have solder mask stopping the solder from going off pad.

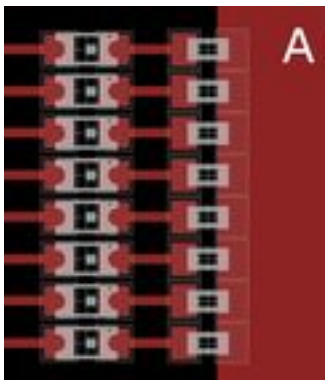

[5]Method A here is bad. It might just barely meet IPC standards, but it still is really not manufacturable. First, there are no thermals. That makes the solder melt much slower on the right side which can lead to unreliable solder joints or tombstoning.

Second, even though the theoretical solder mask openings don't touch and the keep-out (it's not shown but is just a hair narrower than the mask area) areas don't touch, they are close enough that you might not have any mask between the parts on the thermal pad. That can lead to components shorting.

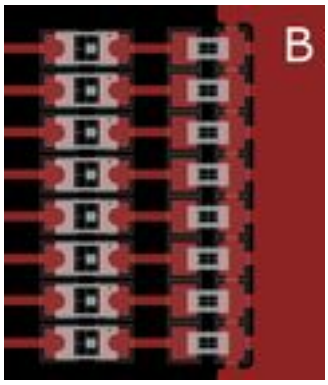

[6]

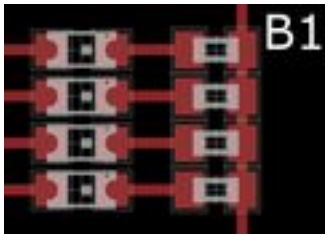

[7]Method B is also bad. You have your thermals in there so that's good, but the parts are still so close together that you might not get any mask between them, leaving a path of bare copper between the parts that can cause them to drift around and mess things up.

Method B1, on the right here has the same issue. Likely no solder mask between the parts and a bare copper path between the parts.

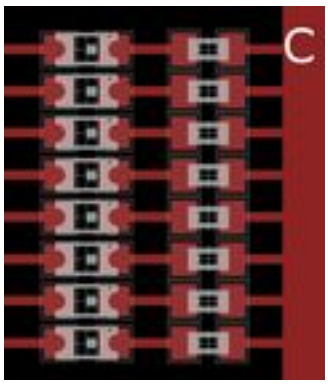

[8]Method C here is fine. The parts are still at risk of not having mask between them, but there isn't bare copper running straight between them. There will be mask between the parts and the pad so there isn't any way for solder to bridge or the parts to drift.

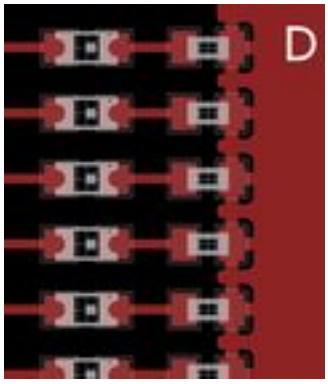

[9]Method D here is also okay. You do need more room to spread the parts apart. That's a bummer, but sometimes "bummer" is the cost of reliability. Here, there will be solder mask between the parts and there are thermals. Everything is happy.

Use method C if you have a little side to side room to play with or method D if you have a little top to bottom spare room.

Duane Benson
Prevent flanking maneuvers.
Don't be like the Solders at Thermopylae

Source URL (retrieved on *08/28/2014 - 12:32pm*):

http://www.ecnmag.com/blogs/2012/08/passively-annoying?qt-recent_content=0

Links:
[1] http://screamingcircuits.typepad.com/.a/6a00d8341c008a53ef0167692520bc970b-popup
[2] http://blog.screamingcircuits.com/2011/07/via-shifting.html
[3] http://blog.screamingcircuits.com/2010/11/little-chippy-challenges.html
[4] http://blog.screamingcircuits.com/2010/07/passive-problems.html
[5] http://screamingcircuits.typepad.com/.a/6a00d8341c008a53ef0176171b2e31970c-popup
[6] http://screamingcircuits.typepad.com/.a/6a00d8341c008a53ef0167692633f3970b-popup
[7] http://screamingcircuits.typepad.com/.a/6a00d8341c008a53ef017744015aa6970d-popup
[8] http://screamingcircuits.typepad.com/.a/6a00d8341c008a53ef01676926425997 0b-popup
[9] http://screamingcircuits.typepad.com/.a/6a00d8341c008a53ef017744015ecc970d-popup