Disintegration provides the energy-efficient answer for today’s feature-packed handsets

Charles Limonard, Dialog Semiconductor

The path towards higher silicon integration seems inexorable. Already, the suppliers of baseband and applications processors into the mobile-phone and tablet markets are looking at the move to 14nm and 16nm finFET-based processes as they seek further cost savings and performance improvements.

But a counter-trend is emerging, one in which power management is now disintegrating from such highly integrated devices. The reason? The quest to make handsets and tablets less energy-hungry.

Power management is a vital part of every handset design and advanced techniques are becoming pivotal to the success of any new design. Without advanced power management, users have to switch off features, such as GPS or high-speed data communications, to prevent them from eating through the battery charge in a matter of hours – even though they bought the handset to have those functions available.

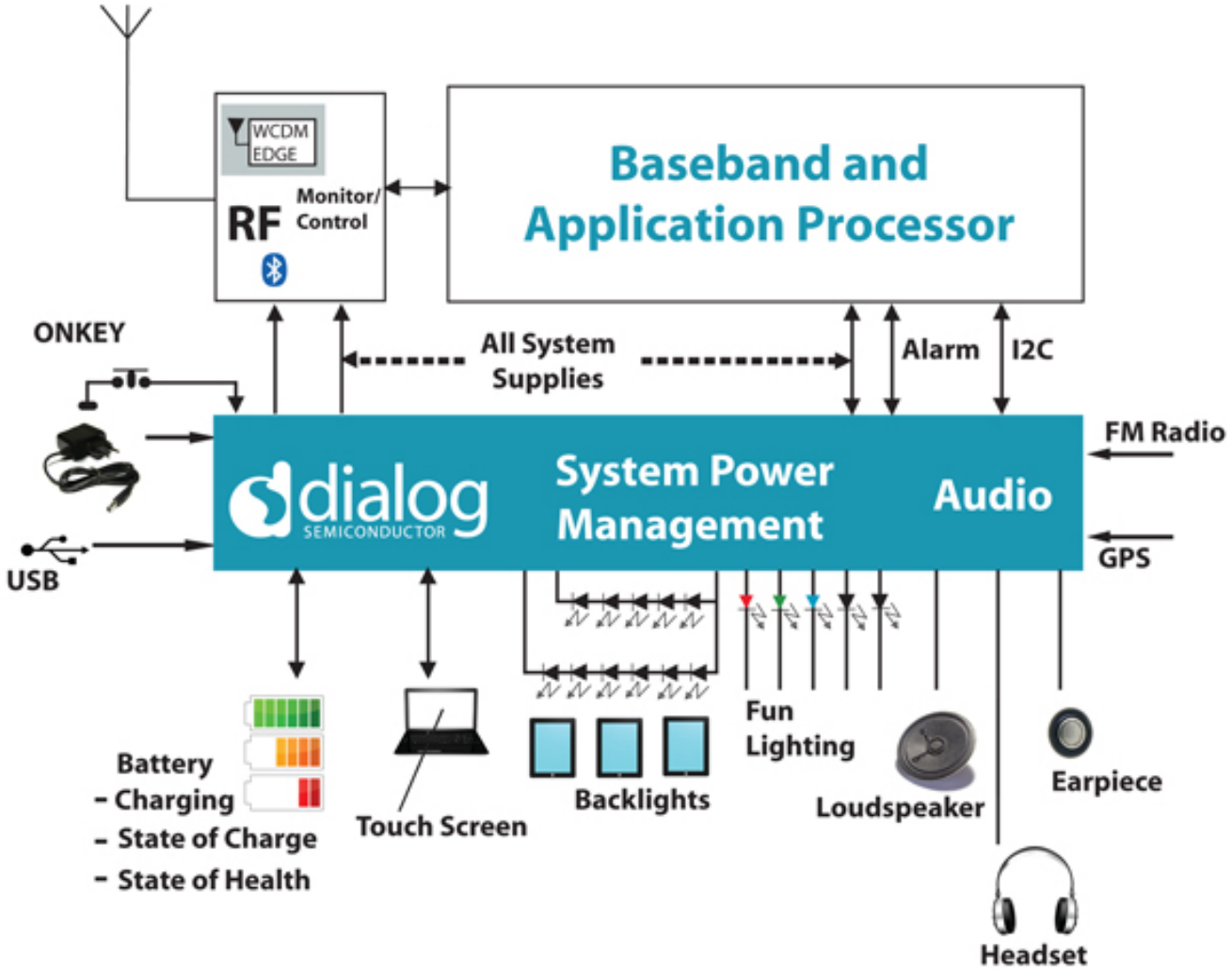

Advanced power management operates by ensuring that only blocks that are absolutely needed are on. Working in concert with system-level software that checks which functions are needed at any one time, the power-management integrated circuit (PMIC) acts as a conductor for the system, telling individual blocks inside each baseband or applications processor device when to wake up and when to go to sleep to save energy.

There are good reasons for the PMIC remaining separate. The PMIC has to generate up to 30 different power supplies to be able to feed different parts of the baseband and applications processor with the right combination of voltage and current. Because the energy consumed is proportional to the voltage, the energy saving can significant. Therefore, it's important that each processor or hardware block gets exactly the right voltage and at the right time.

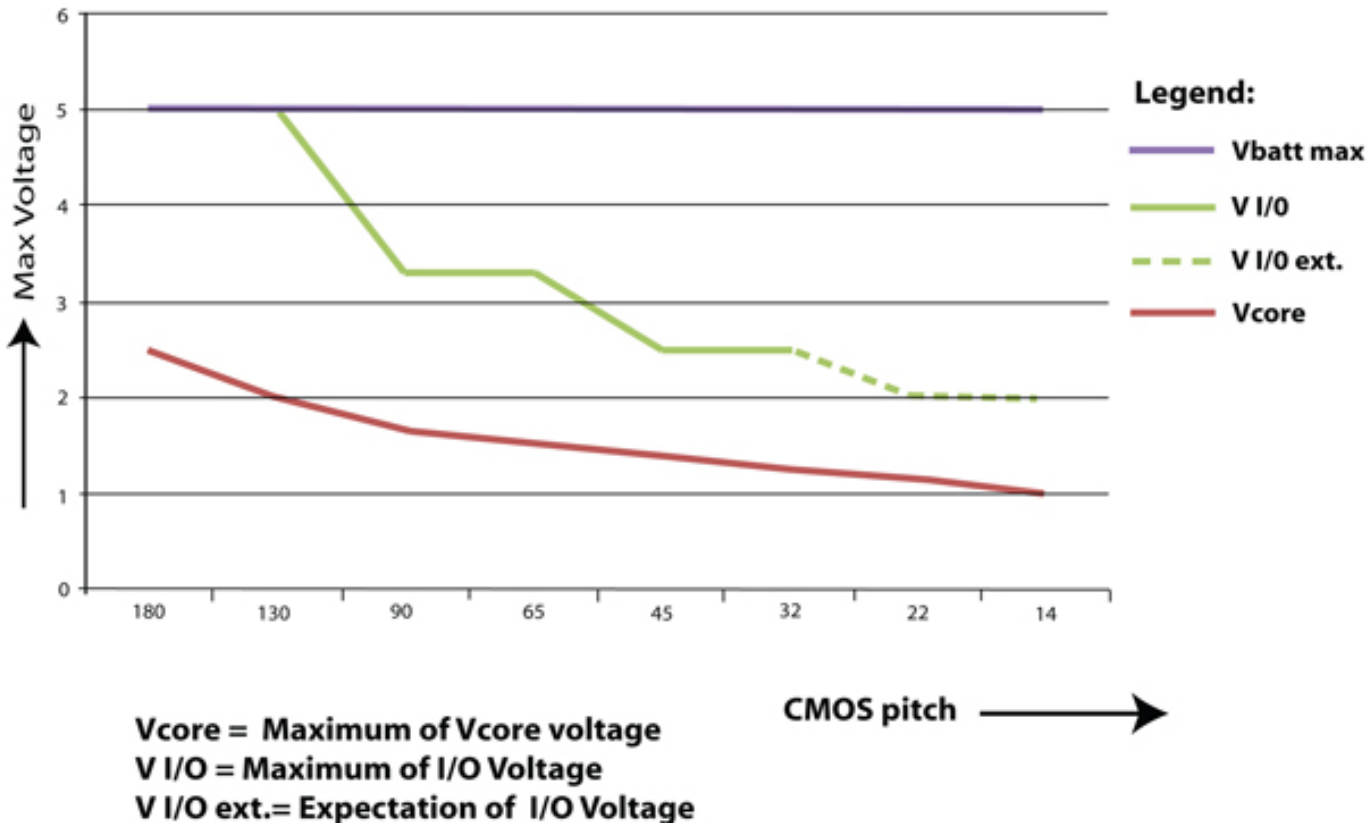

In the past, some SoC designers put simple DC/DC converters and power management on-chip to cater for different on-chip voltages. But the latest semiconductor processes are extremely delicate and can only cope with very low voltages, rather than a single high-voltage supply directly from the battery.

Just to feed a single power conversion block, the SoC needs a high-current supply that can only be carried by aggregating many pins. SoC designers can avoid the additional die and efficiency cost of on-chip power management by using individual low-voltage, low-current supply rails that are supplied off-chip by a dedicated PMIC.

The result is that the PMIC has become the phone's silent power manager, working hard to maximise battery life. It's why disintegration is a technology trend that makes sense in a high-integration world.

Source URL (retrieved on *07/22/2014 - 5:44pm*):
http://www.ecnmag.com/articles/2012/12/disintegration-provides-energy-efficient-answer-today%E2%80%99s-feature-packed-handsets?qt-most_popular=0