Differential signaling best practices

Clark Kinnaird, Industrial Interface Systems Engineer, Texas Instruments

Differential signaling is used for noise immunity in Ethernet, RS-485, CAN and USB. In ideal cases, all common-mode noise is rejected. In real-world applications, there are several design techniques and component parameters to consider in order to keep the data flowing with high confidence. Differential signaling is used in most interfaces, which sends digital information over cables. Although requiring two signal wires rather than one, differential signals are much more immune to noise than single-ended signaling.

The basics of differential signaling are well-known, taking advantage of the noise rejection which affects both signal wires equally. This is illustrated in Figure 1, where a balanced differential signal is transmitted on two twisted signal wires (twisted-pair).

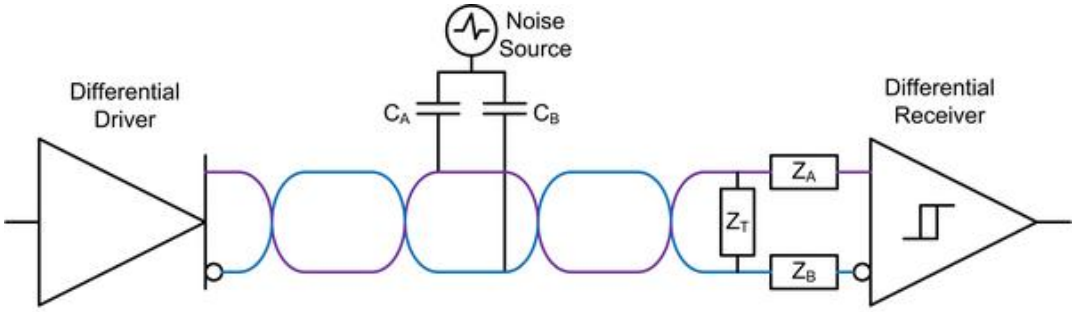

Electrical noise from the environment affects both wires equally, such that the received signals on A and B are:

$V_A = + ½ V_{SIGNAL} + V_{NOISE}$
$V_B = - ½ V_{SIGNAL} + V_{NOISE}$

so that the differential voltage signal is:

$V_A – V_B = V_{SIGNAL}$

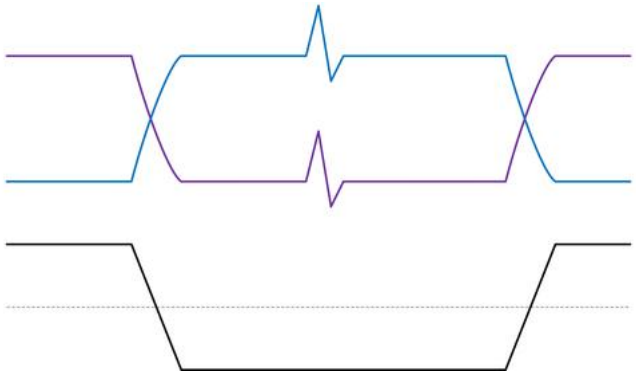

Popular electrical standards such as USB, Ethernet, RS-485 and CAN use differential signaling and balanced twisted-pair media to provide reliable high-speed communication.

In practice, designers should keep in mind that no real system has the ideal performance of a theoretical model. There are several key sources of errors and noise that should be considered.

Line-to-line impedance imbalance

Balanced signal wires are critical to the noise immunity of differential signaling. Twisted-pair cables specify the level of imbalance allowed. For example, at low-frequencies CAT 6A is specified with 40 dB of transverse conversion loss. This means that a 1V transient coupled to both signal lines (common-mode) creates only 10 mV of differential-mode signal. Lower grades of cable allow higher fractions of common-mode to differential-mode conversion.

Imbalance in the differential path can be caused by components added to provide protection against transients. For example, transient voltage suppression (TVS) components are sometimes prescribed as a means to prevent damage due to electrostatic discharge, voltage surges, or electrical bursts. Designers should check the matching characteristics of these components to ensure that each differential line is affected equally.

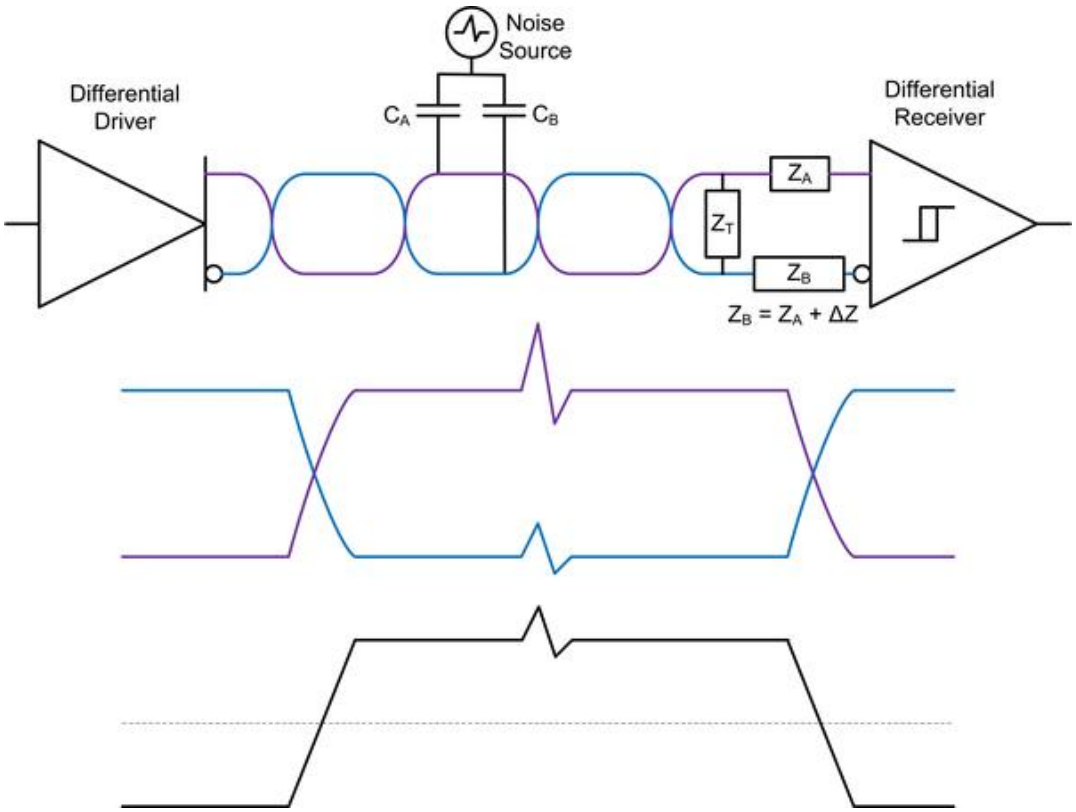

Other potential contributors to imbalance between the differential lines include board traces and connectors. In both cases, the impedance and matching may depend on the frequency being considered. Designers should consider the

frequency content of the intended signaling and expected electrical noise environment.

Transmission line length

Inequality of the signal line lengths is another source of differential-mode to common-mode noise conversion. If noise is equally coupled to two perfectly balanced lines, but the noise signals reach the differential receiver at slightly different times, this is seen as non-zero differential noise. This becomes a significant issue as the frequency bandwidth increases.

$V_A = + ½ V_{SIGNAL} + V_{NOISE} = + ½ V_{SIGNAL} + A \sin [t]$
$V_B = - ½ V_{SIGNAL} + V_{NOISE}' = - ½ V_{SIGNAL} + A \sin [(t+t)]$
$V_A - V_B = V_{SIGNAL} + A \{\sin [t] - \sin [(t+t)] \}$

When *t* corresponds to a 180-degree shift in the noise frequency, this causes the worst-case condition where the resulting differential noise has twice the amplitude as the original common-mode noise. But even small phase-shifts can cause significant fractions of common-mode to differential-mode conversion. For instance, a phase shift of one-tenth radian (about six degrees) causes about 10 percent of the common-mode noise to appear as differential signal.

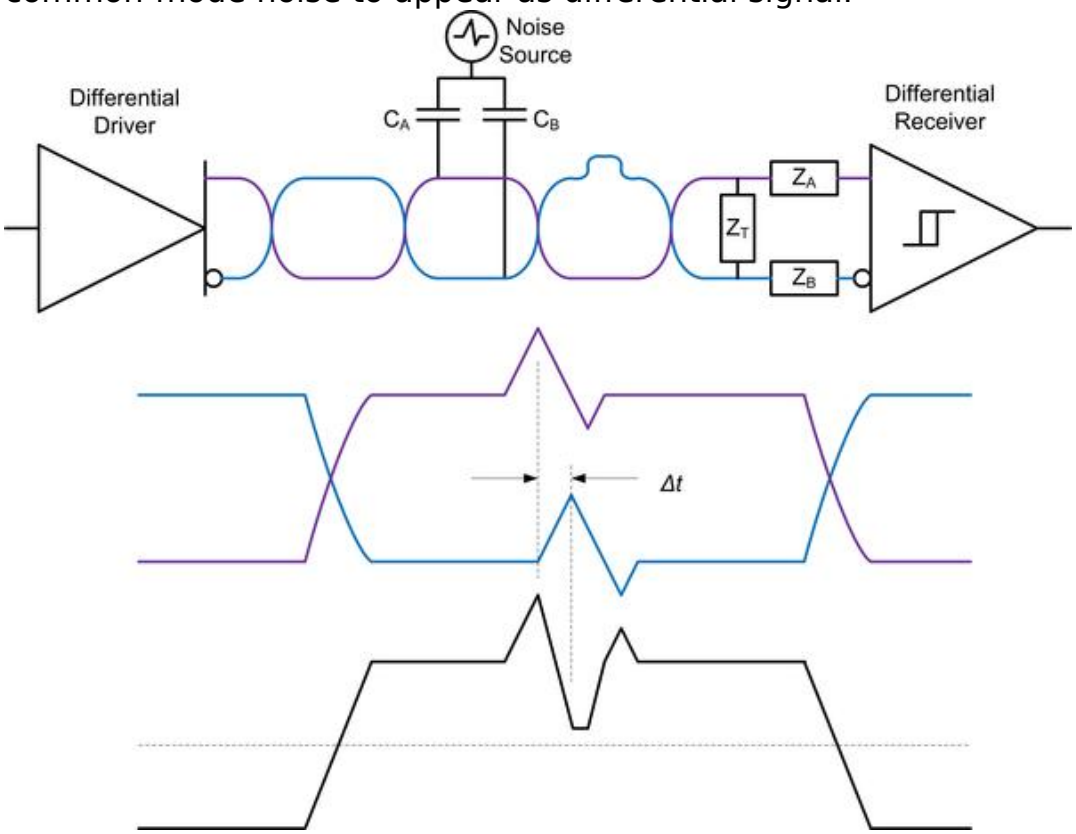

Taking a concrete example, assume the differential receiver for a USB 2.0 device has a bandwidth of at least 1 GHz to receive 480 Mbps data. If 1 GHz noise is coupled to the differential lines, a difference in length of 3 mm corresponds to about 15 picoseconds of time shift, which is about one-tenth radian of phase-shift between the two lines. This can cause 10 percent of the incident 1 GHz noise to appear as differential voltage, which could cause unintended receiver state switching. For lower-frequency standards, such as RS-485 or CAN, the receiver bandwidth, and

therefore the sensitivity to line-length inequality, is correspondingly reduced.

Reduced immunity during idle and cross-over times

When the bus lines are being actively driven to a valid logic state, the driver output level has significantly more amplitude than the receiver threshold levels. This margin assures that the transmitted state is received correctly, even if the signal is attenuated by electrical losses and corrupted with some level of differential noise.

However, when no driver is actively transmitting, the bus lines are more susceptible to corruption by induced differential noise. This same susceptibility occurs during transition from one valid state to another, as the differential signal enters the neighborhood of the receiver threshold. In either of these cases, relatively small amplitudes of differential noise can momentarily cause unintended receiver transitions from one output state to another. During these critical times, receiver hysteresis provides a measure of noise immunity.

Hysteresis improves noise immunity

Receiver threshold hysteresis reduces the sensitivity of differential receivers to electrical noise on the signal lines. The amount of separation between the threshold levels must be controlled so that the overall sensitivity of the receiver still meets the standard’s requirements. Therefore, receiver hysteresis (usually measured in mV) is an indicator of the differential noise immunity of any particular transceiver or PHY. Designers should consider the receiver hysteresis when concerned with noisy environments.

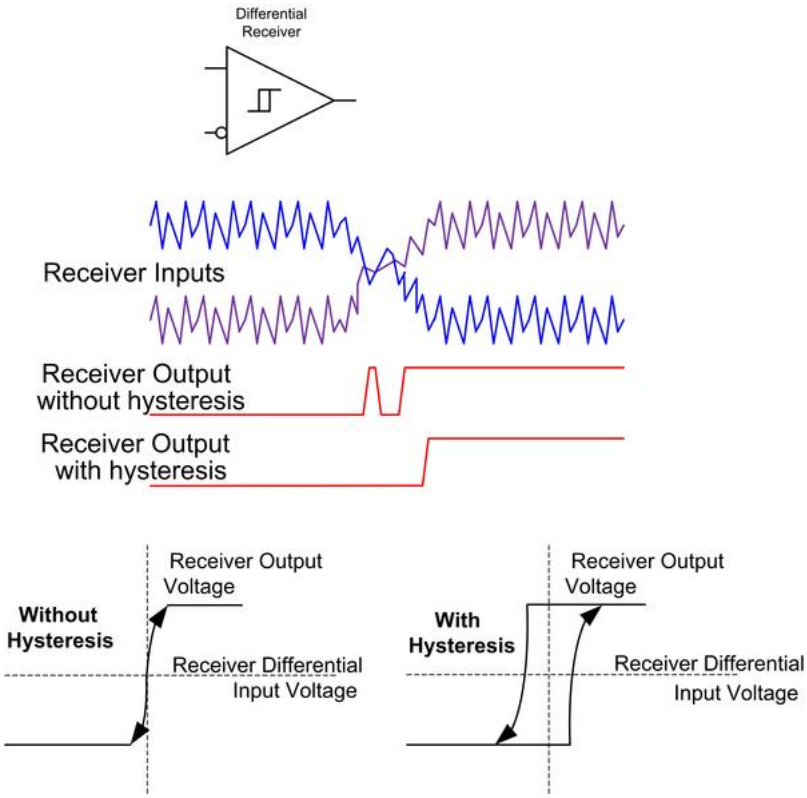

In summary, system designers should evaluate several sources of potential problems in their differential networks. These include cable, connectors, and protection devices, as well as the transceiver

itself. The impedance tolerance for each component on the differential signal lines should be kept within a total imbalance budget. The transmission line length of each differential signal must be equal within a small fraction of the shortest wavelength of interest. Board layout and connector pin arrangement are important, especially for high-frequency networks. Finally, choose differential receivers with more hysteresis for high-noise applications. Taking these steps can help ensure reliable communications even in applications with noisy environments.

References

For more information visit these sites: www.ti.com/rs485-ca [1], www.ti.com/can-ca [2], www.ti.com/interface-ca [3].

About the author

Clark Kinnaird is a systems engineer at Texas Instruments. He received his PhD EE from SMU, Dallas, a MSE EE and a BS in Nuclear Engineering from the University of Florida. Currently, Clark is also an adjunct Associate Professor of EE at SMU. Clark can be reached at: ti_ckinnaird@list.ti.com.

Source URL (retrieved on *08/02/2014 - 4:46am*):
http://www.ecnmag.com/articles/2012/12/differential-signaling-best-practices?qt-recent_content=0&qt-video_of_the_day=0

Links:
[1] http://www.ti.com/rs485-ca
[2] http://www.ti.com/can-ca
[3] http://www.ti.com/interface-ca