Avoid cracked screens: An airbag for your smartphone

Kasey Panetta, Associate Editor

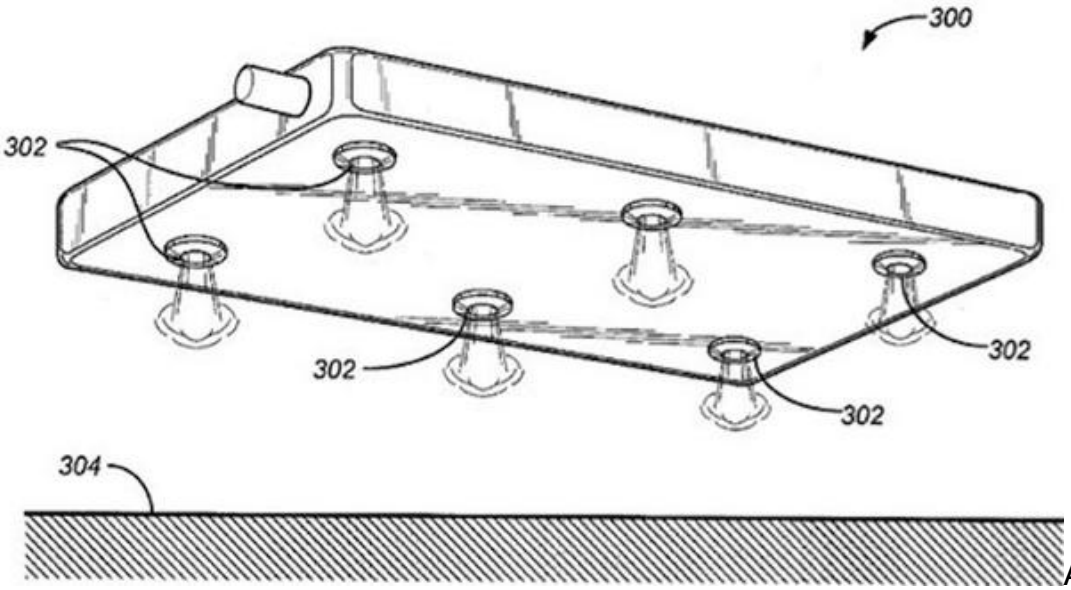

As the proud new owner of an iPhone 5, I have but one concern: Can this phone survive my clumsy self? For the past three years, I've been the increasingly less proud owner of a Blackberry Bold. It was slow, bulky, people mocked me for having it, and viewing a website was as much fun as going to the DMV, but, *man*, could that thing take a hit like Floyd Mayweather.

Luckily, those who have cracked the screen before me have come up with a new product that just might make phone insurance a thing of the past: an airbag for your phone.

Jeff Bezos, Founder and CEO of Amazon, submitted the patent for a cushioning device that could put a stop to cracked phones by utilizing components already present in most smartphones. According to the patent, "if the risk of damage to the device exceeds a threshold, a protection system is activated to reduce or substantially eliminate damage to the device."

Basically, the system relies on the phone's gyroscope, camera, accelerometers, and other motion sensors to detect when the device is in free fall. If the phone is going to suffer a crash with a hard surface, the system deploys a side air bag to break the fall. Future designs might include air-jets to adjust the angle the phone will hit at and lessen the damage.

Not buying it? Here's the patent application [1]; check it out for yourself. The idea is that it could be expanded to airbags for tablets or e-readers, as well as smartphones.

Most likely, this will be one of those weird gimmicky things that never quite takes off the way it should. Considering the amount of money people pour into their tablets/smartphones--and by people I mean myself--it's not that far fetched of an idea to have a way to keep the screen on your expensive toys from cracking if you have one clumsy moment. The issue is unless the designers find a way to make it cheap and integrate it seamlessly into the design of the Android or iPhone, it probably won't fly off the shelves. But, then again, no one expected the Snuggie to make a cultural impact, either.

Source URL (retrieved on *08/01/2014 - 9:17pm*):
http://www.ecnmag.com/articles/2012/12/avoid-cracked-screens-airbag-your-smartphone?qt-most_popular=0&qt-video_of_the_day=0

Links:
[1] http://appft.uspto.gov/netacgi/nph-Parser?Sect1=PTO1&Sect2=HITOFF&d=PG01&p=1&u=%2Fnetahtml%2FPTO%2Fsrchnum.html&r=1&f=G&l=50&s1=%2220110194230%22.PGNR.&OS=DN/20110194

230&RS=DN/20110194230