An optimized power factor-corrected driver for LED bulbs

Bernie Weir and Frazier Pruett, ON Semiconductor, www.onsemi.com

As incandescent bulbs are phased out, the two options that offer significant energy savings are compact fluorescent (CFL) and LED. While CFL's are a mature technology, white LEDs are still advancing rapidly with higher lumens per packaged LED as well as increased efficacy. LED bulbs can now offer lifetimes at least 25 times that of a standard incandescent bulb with efficacy already exceeding the performance level of CFL bulbs. What may not be understood is that while incandescent bulbs appear like resistive loads to the AC mains and have near perfect (~1) power factor (PF), the electronic ballast inside the most common CFL bulbs is capacitive and has a typical power factor of 0.5-0.6. This means that while the homeowner only pays for delivered watts, the electric utility must actually generate the proportional volt-amps so a 13 W CFL bulb with a PF of 0.5 represents a 26 volt-amp load, which is slightly less than 50 % of the volt-amps of 60 W incandescent. As a result, in the US, the Energy Star program has established a minimum power factor of 0.7 for >5 W LED bulbs and 0.9 for commercial LED luminaires such as downlights and spotlights. Globally, the US does not have the toughest PF requirements for LED bulbs; this prize goes to Korea where the minimum PF requirement is 0.9 for bulbs with input power over 5 W. This requirement presents challenges in designing the drive electronics where efficiency, available space, and bill-of-material cost must all be evaluated to achieve an optimal solution.

Recall that incandescent bulbs are designed for one specific line voltage. Applying this principle for LED bulbs introduces a new degree of freedom for designers as they no longer need to consider a single universal design that must work globally. In addition the power supply within the bulb does not need to be electrically isolated from the load as it is integrated inside a single housing. Granted care must still be taken in the mechanical design to meet the safety requirements through physical means. Taking that into account, it is no longer necessary to use an isolated flyback topology as the only power conversion architecture option.

A buck topology can be optimized for good power factor under specific boundaries. Recall for high power factor the input current is coincident with the line and increases proportionally as the rectified line voltage increases. The drawback of the buck is that no current flows until Vin is greater than Vout, this is why it is important that compared to the line voltage, the LED string voltage must be relatively low. This is not a problem as in most cases the number of LEDs in series is relatively low compared to the line voltage. For example, 8 LEDs in series is ~ 25 V which is < 15 % of the peak voltage of a rectified 120 V ac input.

One control scheme for high PF boost converters is a fixed on time control where the switching cycle restarts when the inductor current reaches zero. To control the

power, feedback is used to adjust the on time. The same concept can be adapted to implement a buck topology and can be improved with a twist. With fixed on time, the current through the inductor/switch rises in proportion to the line, this results in near perfect power factor with the tradeoff that the peak current can be very high at the top of the switching cycle. In the bulb case, ideal power factor is not required so if the peak current is limited during a portion of the switching cycle, losses in the switch and inductor can be reduced which achieving higher conversion efficiency and limiting the inductor size. This creates a typical line current waveform which doesn't look very sinusoidal as seen in Figure 1. However this waveform easily achieves a PF > 0.9 with the tradeoff of increased distortion.

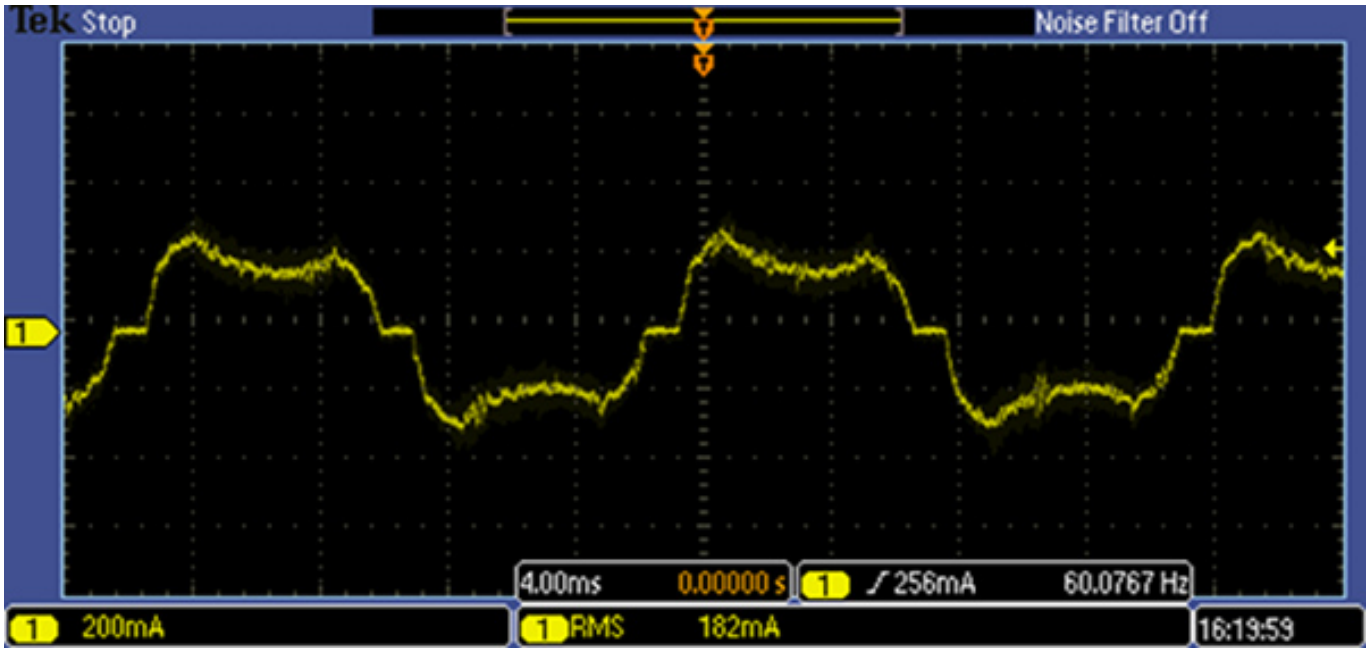

To implement this hybrid fixed on time/peak current scheme the NCL30002 controller from ON Semiconductor has been developed and Figure 2 illustrates the complete application schematic.

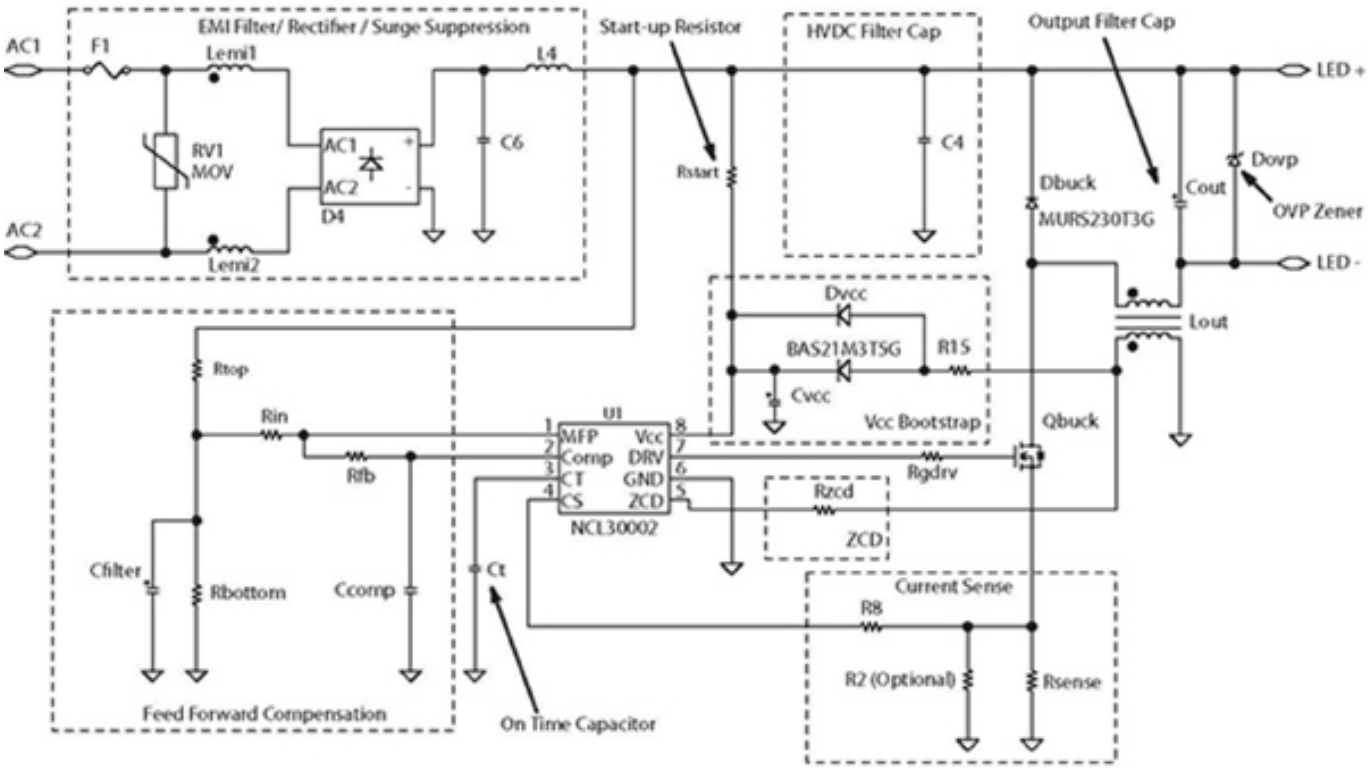

The first point in reviewing the schematic is that the LEDs are referenced to the high voltage rail while the power switch is referenced to ground. This is referred to as a reverse buck and simplifies the architecture since the peak LED current can be sensed directly and to drive the FET, a level shifter is not required. After the controller starts switching, the driver is biased from an auxiliary winding on the inductor, this has an added function to sense when the current through the inductor drops to zero indicating a new switching cycle should start. A precise 485 mV (± 2 % typical) is used to regulate the peak current through the switch. After Vin exceeds the LED Vf, fixed on time control is used to regulate the power to the LEDs until the peak current limit is reached which is detected by Rsense. To control the delivered power if the AC line varies from nominal, line feedforward compensation is used to modulate the on time.

An example 18 W design was implemented that is suitable to be incorporated inside an LED replacement for a 75 W A-lamp based on driving a string 8 LEDs at 750 mA with an output ripple of < ± 30 %. Figure 3 is a picture of this 18x60 mm board. Typical efficiency was >90 % and power factor was >0.94 as illustrated in Figure 4.

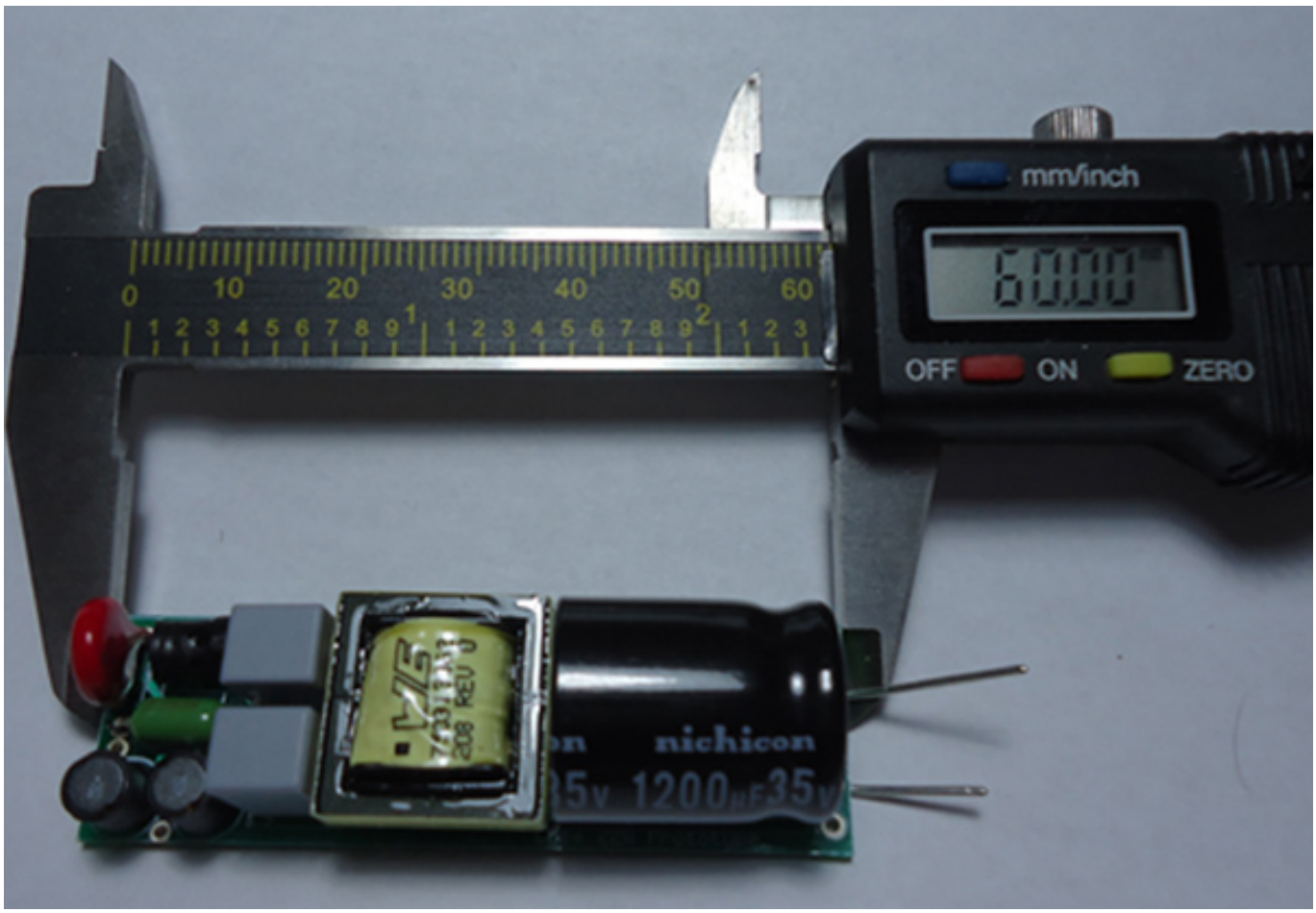
mm/inch
60.00
OFF
ON
ZERO
nichicon
1200µF 35V

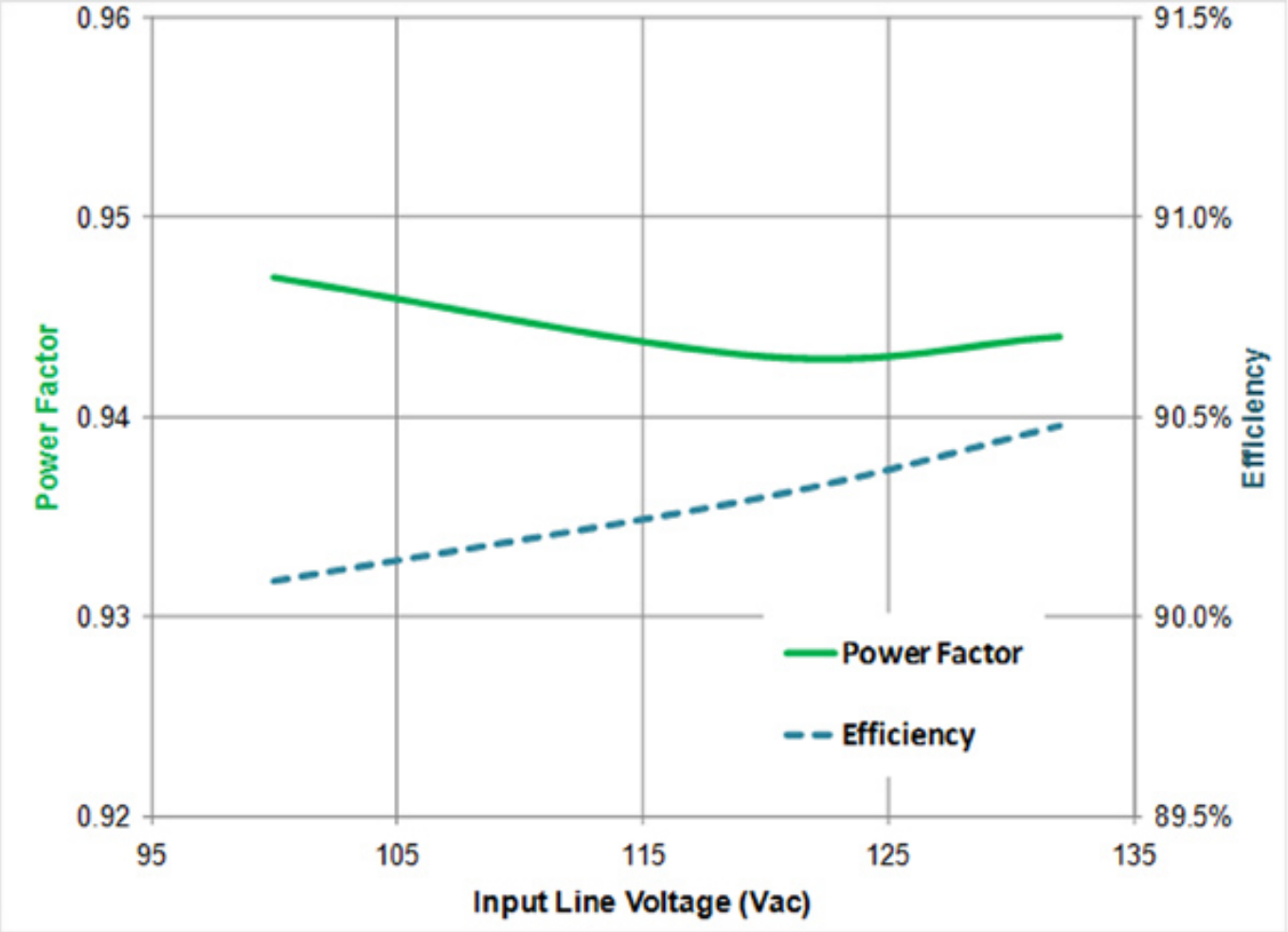
0.96
0.95
0.94
0.93
0.92
91.5%
91.0%
90.5%
90.0%
89.5%
Power Factor
Efficiency
95
105
115
125
135
Input Line Voltage (Vac)
Power Factor
Efficiency

As illustrated, with an optimized architecture, it is possible to solve the challenging puzzle of achieving high efficiency in a compact form factor while meeting the most stringent PF requirements for integral LED bulbs. The basic design can be scaled for lower power by changing the MOSFET and reducing the size of the inductor. This is critical since LED efficacy will continue to advance as manufacturers increase lumen output per LED, requiring few LEDs for the same lumen output and thus pushing down the energy consumption while at the same time reducing the cost of integral bulbs and increasing their market acceptance.

Source URL (retrieved on *09/01/2014 - 8:09am*):
http://www.ecnmag.com/articles/2012/11/optimized-power-factor-corrected-driver-led-bulbs