Introducing capacitive touch sensing to home appliances

Pushek Madaan and Sachin Gupta, Cypress Semiconductor

One of the most important factors in the purchase of home appliances is how the product looks and what high-end features it supports. With today's highly integrated System-on-Chip (SoC) processors, designers can introduce not only a new UI based on capacitive sensing but also incorporate other system functions to lower system cost and save board space. At the same time, SoCs enable faster time to market because many of the components required to build a system are available in the same silicon. In addition, the time required to interface multiple devices and debugging for failures is reduced considerably.

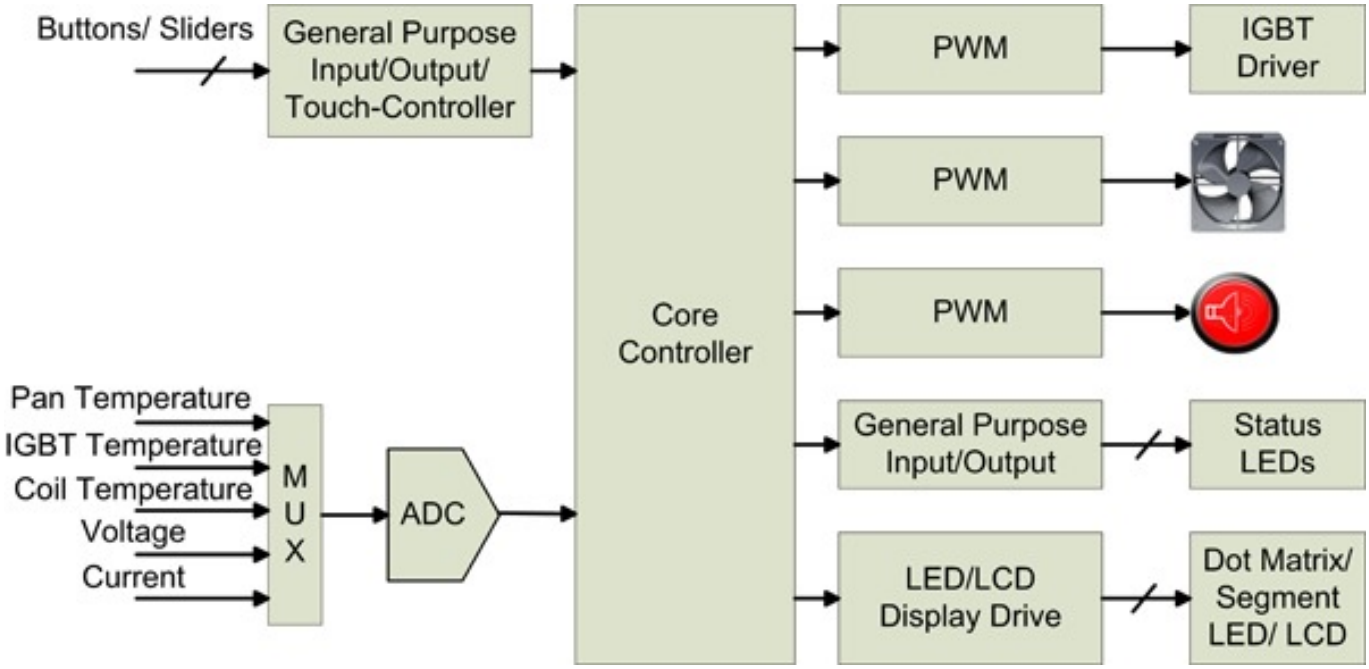

Figure 1 shows the block diagram of an induction cooker. Such an appliance must perform several key functions:

• Maintaining the pan temperature: requires pulse width modulation (PWM) to set the firing duration of heating coil
• Fan control: requires temperature sensor and PWM to drive fan motor
• Over-current and voltage protection: requires ADC and comparator
• Pan auto-detect: requires induction sensing
• Time based cooking functions: requires real-time clock (RTC)
• User interface – Display: requires driver for LED segment or LCD glass display
• User interface – Buttons: requires capacitive touch sensing and detection

Capacitive sensing
Capacitive sensing-based buttons give appliances a sleek look and eliminate wear and tear, making them a preferred technology over mechanical buttons. Many

appliances are used around liquids, so waterproofing is required to prevent false triggering in the presence of water. Figure 2 shows a typical layout of a capacitive sensor printed circuit board (PCB). Instead of connecting the hatched pattern surrounding the sensor (blue) to ground, water proofing is enabled by connecting it to a shield electrode.

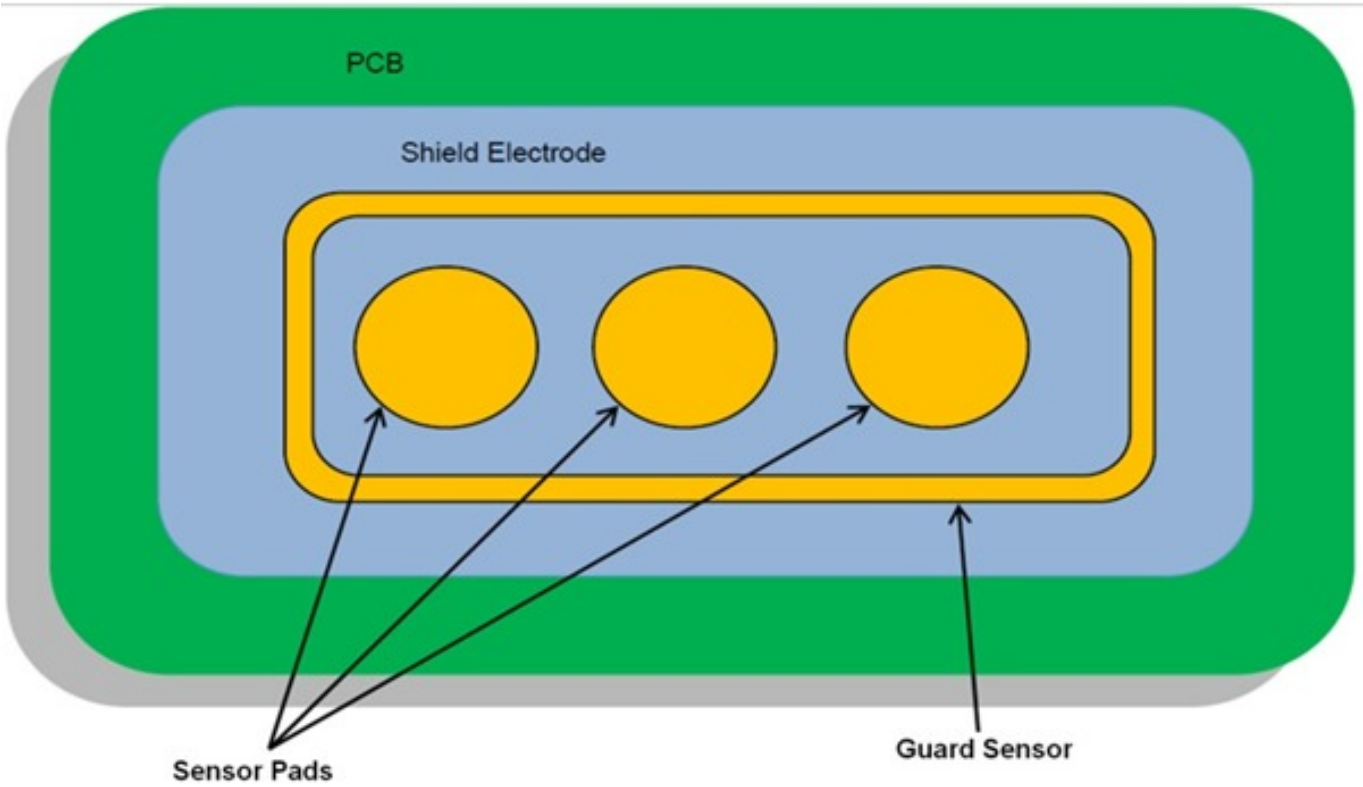

This electrode is driven by the same signal that is connected to the sensors. Thus, when a water droplet falls on the sensor, because there is no potential difference between the hatched pattern and sensor, no additional capacitance gets coupled on the sensor, thus achieving water proofing. In the case when the sensors are completely submerged with water, the guard sensor is activated to disable the sensors.

Because many appliances work with large currents, the power supply generally carries significant noise/ripples due to variations in load current and digital switching that can couple to capacitive sensors and impact the reliability of the UI. By following proper schematic and layout guidelines, ripples in the power supply can be reduced through techniques such as laying out ground traces to ensure there is no ground bouncing. However, it is very difficult to remove noise completely. If the reference is driven from +ve line of power supply, it may cause false alarms in capacitive sensing.

By switching sensors between GND and VREF (generated internally), any change in the power supply will not cause false triggers, provided they are within the specified operating limit of the device.

Higher integration, lower cost
SoCs have integrated on-chip peripherals and hardware-based features that can enable designers to implement most if not all of an appliance’s functions.

In today competitive consumer market where appliances need to be feature-rich, an integrated SoC becomes the best choice for OEMs by allowing more and more application features to be integrated and lower overall system cost. This approach holds for smaller appliances like induction cookers and microwave ovens as well as larger appliances like washing machines or refrigerators(although larger devices may still need a dedicated control for specific functions like FOC motor control).

Pushek Madaan is currently working with Cypress Semiconductor India Pvt. Ltd. as a Senior Application Engineer. His interests lie in designing Embedded system applications in C and assembly languages, working with analog and digital circuits, developing GUIs in C# and, above all, enjoying adventure sports. Pushek can be reached at pmad@cypress.com *[1].*

Sachin Gupta is working as Product Marketing Engineer with Cypress Semiconductor. He holdsB.Tech in Electronics and Communication from Guru Gobind Singh Indraprastha University, Delhi. He has several years of experience in mixed signal applications development.

Source URL (retrieved on *05/21/2013 - 5:04am*):
http://www.ecnmag.com/articles/2012/11/introducing-capacitive-touch-sensing-home-appliances?qt-video_of_the_day=0&qt-recent_content=0

Links:
[1] mailto:pmad@cypress.com