How to use off-the-shelf DC-DC converters for backlight applications

David Smith, Sr. Field Applications Engineer, Seiko Instruments

It has become increasingly more common in portable, handheld devices to use white backlighting for display illumination. The use of white LEDs, are practical in mobile applications due to the need for color reproduction and balancing. For a low cost, simple alternative, an inductive-based DC-DC converter can be used with external circuitry to include PWM dimming and load disconnect. Besides selecting the boost IC, other challenges include, peak current of inductor, matching I-V curve of numerous LED's of the same type, and maximum PWM frequency which depends on supply and switching response. When designing an LED driver circuit, three important characteristics need to be considered: color, brightness, and forward voltage. Other parameters, such as temperature, EMI, aging, and noise issues will not be discussed.

LED drive and efficiency

Driving LEDs in a parallel configuration has its benefits and risks. While parallel does not have the advantage of inherent matching of current or brightness, like series, it does allow for smaller withstand voltage for output capacitors. In addition, the forward currents can be made equal. Though it does not have the optical benefit of matching, it has a mechanical advantage of allowing an LED string to stay illuminated if any LED breaks in an adjacent string. Typically, White LEDs have a forward voltage of 3.1V to 4.0V, therefore a single string can contain up to 4 LEDs with the use of MLCC capacitors. The LED forward current is typically from 10-35mA. Therefore, it is possible to support up to 4 LEDs in any given string and combination of series, parallel can be used to support 8 to 16 LEDs. While the efficiency of an LED is determined by light output (lumens) per output power (watts), the power supply efficiency depends on any losses with the current-sense resistor, its surrounding external parts and power consumed by LED. To maximize total efficiency, a low current-sense voltage and resistor are desired.

PWM dimming control

A common feature of LED drivers is dimming. Analog dimming, brightness is due to amount of current, is simple and easy to implement. It has high Signal-to-Noise ratio and no strobe effect or flickering, however there is possibility of color shift due to change in current and part variation due to mass production. The preferred method is PWM dimming, where brightness is related to duty cycle. This method allows LED to emit desired color, regardless of intensity. Typically, PWM frequencies are controlled between 100Hz to 50kHz. There are several ways to implement, depending on PWM frequency and contrast ratio required. Controlling the Enable pin of the IC, may not be sufficient due to the IC's soft-start functionality. Therefore by adding simple circuitry, dimming with fast enough slew rates and adequate fall and rise times of LED current is obtained. In Figure 1, a high impedance resistor and transistor is added to implement PWM dimming.

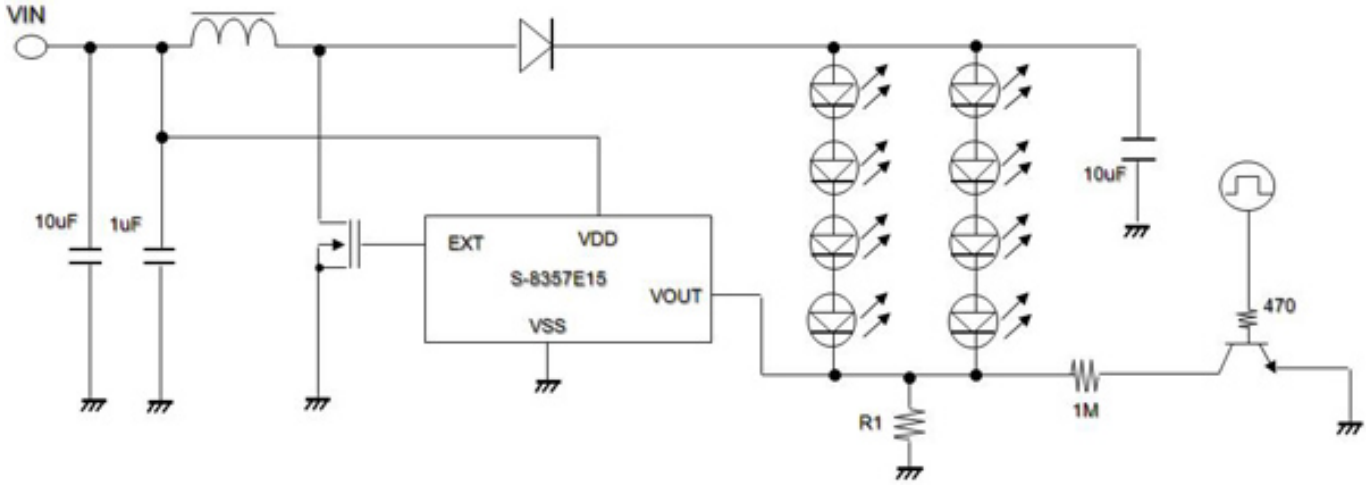

Load Disconnect

In boost circuit topology, the load remains connected to the battery via inductor and diode. When Enable pin is turned off, current flow is only reduced, but not completely minimized. The PWM dimming function is also affected without Load Disconnect. Even if dimming and battery are disabled, the output capacitor still discharges via the LEDs until dimming is activated again. At the start of next dimming cycle, the output capacitor is only partially charged. So when charging begins, in rush current will flow and cause unwanted voltage transients to the system, reducing its efficiency. Therefore, it is necessary to disconnect LEDs from input source. There are two ways to implement, either by adding transistor between diode and LED anode, or in between LED cathode and sense resistor. Please see Figure 2 for example.

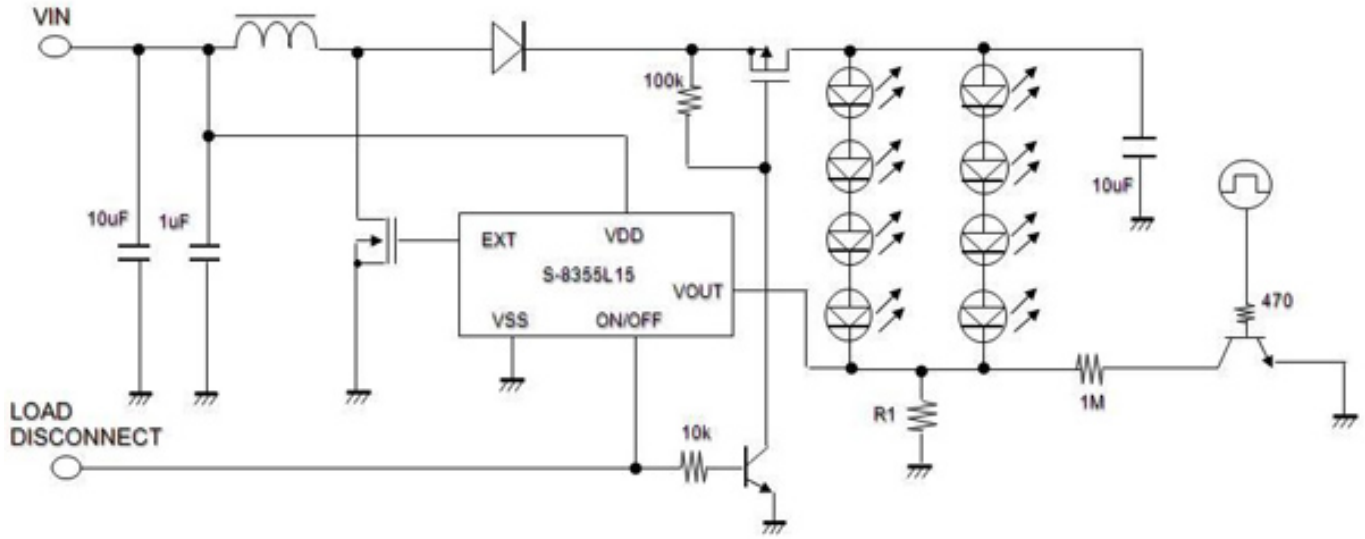

Summary

There are many solutions available to drive white LEDs for backlighting illumination ranging from charge pumps, LED drivers, and inductive-based DC-DC converters. It

is possible to use a less expensive, off-the-shelf boost DC-DC converter, with low output voltage, as an integrated LED driver. Simple circuitry can be added to implement functions such as PWM dimming and load disconnect. The battery life can be extended due to external part and IC selection, while determining the best series and parallel combination for the LED array.

Source URL (retrieved on *12/20/2013 - 2:29pm*):
http://www.ecnmag.com/articles/2012/11/how-use-shelf-dc-dc-converters-backlight-applications?qt-video_of_the_day=0&qt-most_popular=0