Design safe endoscopes and medical imaging devices with high-speed digital isolators

Zhang Bin, Application Development Manager, Avago Technologies, and Harold Tisbe, Application Engineer, Avago Technologies

In medical imaging devices, large quantities of video imaging data need to be transferred from image sensor to image processor while maintaining high levels of electrical isolation so the sensor won't shock the patient. The high-speed digital data transmission channels between the sensor and image processor require high-levels of isolation while transferring data at up to 100Mbaud for real-time displays.

The combination of high speed and stringent safety requirements presents significant challenges to isolation design and often resulted in expensive solution, e.g. fiber optics. With the latest transformer on flex technology, cost-effective isolation solutions now meet both speed and medical safety requirements.

Using magnetic coupling through a thick insulation barrier, the isolators enable high-speed transmissions without compromising isolation performance. These isolators consume low power even at high data rates, yet provide excellent transient immunity performance in compact surface mount packages. The devices are qualified to a maximum propagation delay of 36 ns.

Overview of endoscope system design and isolation requirements
Shown in Figure 1 is the schematic block diagram of an endoscope where a light guide and a CCD image sensor are housed in a flex tube that is introduced into a patient's body. Video signals of what the sensor captures are transmitted to the CCD analog-front-end (AFE) circuit where they are digitized and sent on to an image processor for image reconstruction. Typically, digitized data from the AFE is 16 bits wide and clocked out at the rate of up to 50MHz or more, depending on image size and resolution requirements.

The control signals configuring ADC behavior and timing units are of lower speed in nature. However due to the needs for fast throughput and the use of a high-speed clock, it is important that the insertion of digital isolators does not introduce additional pulse-width distortion. Channel-to-channel propagation delay skew should also be kept to a minimum to ensure synchronous data transfer at high data rates. Given large number of data and control channels it is most desirable that more channels could be integrated into single package for space saving.

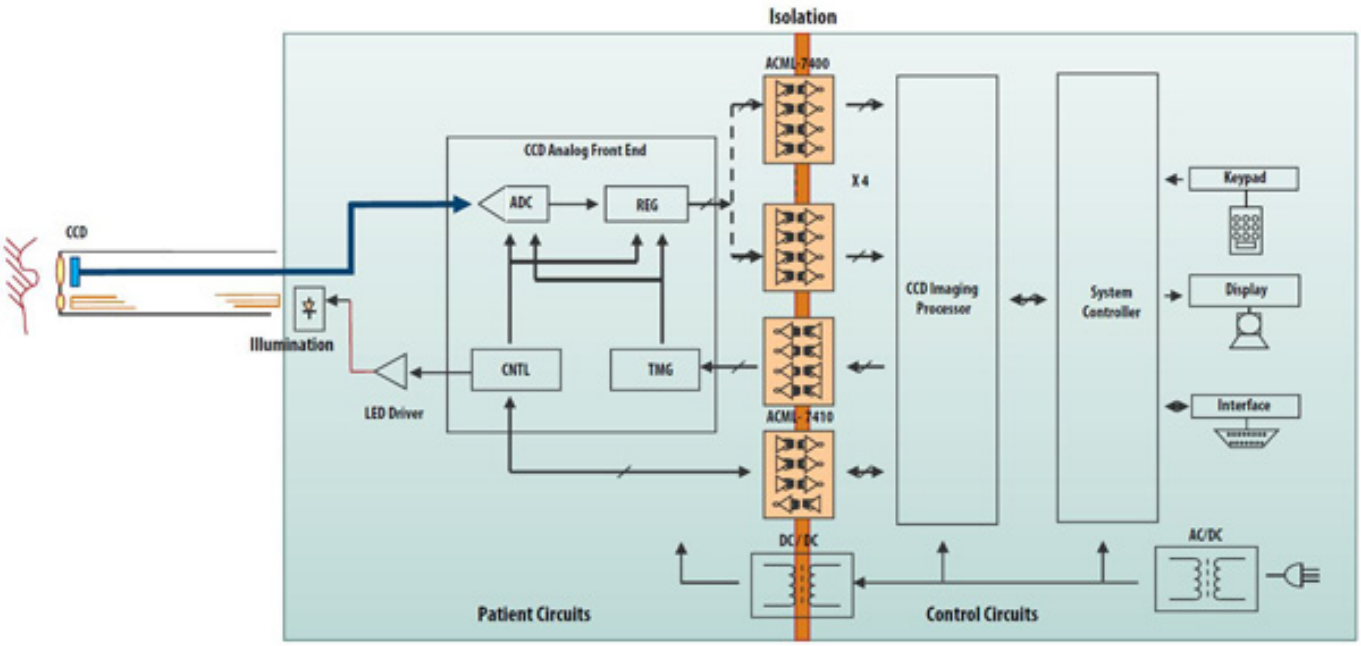

Figure 1. Schematic block diagram of typical endoscope using the Avago ACML-74xx family of transformer-on-flex isolators.

Patient contact circuits and image processing circuits must be separated electrically from the rest of the system and power supply according to safety requirements of IEC60601-1. As the potential of patient contact could be raised to the power-line voltage under a single-fault condition, the isolation barrier should be fault tolerant and meet requirements that include two means of patient protection.

High-voltage transients could possibly present across isolation due to electrical-static discharge (ESD) since patient contacts are always floating and accessible by patients and medical operators. The conventional methods of ESD protection by high-voltage diodes are not allowed across isolation barrier since that violates the galvanic safety isolation requirements. Thus the insulation material and construction of the digital isolator must withstand highest ESD transients without insulation degradation.

Equipment and isolation requirements of typical medical imaging device in hospital environment connected to 240Vac mains are summarized in Table 1.

Equipment Requirements	Isolator Parameters	Specifications	
High Speed	Data Rate	>= 100Mbaud	
	Pulse Width Distortion	<= 2ns	
	Propagation Delay Skew	<= 3ns	
Meeting IEC 60601-1	Continuous Working Voltage across Isolation	>= 120Vrms	>=240Vrms
	Transient Withstand Voltage (1min)	>= 3000Vrms	>=4000Vrms
	Leakage Current at 400Vdc	< 10µA	
Robust Isolation against ESD	ESD across isolation (HBM)	>= 16kV	

Table 1. Isolation requirements of medical imaging equipments

Choices of isolation

Fiber-optic based connections and pulse transformers can be used for high-speed data isolation. However fiber optic solutions are expensive since they require optical transmitters and receivers. Pulse transformers are bulky if they have to meet medical safety requirements. And, both solutions cannot achieve sufficient integration to provide a high channel density per unit area.

Optocouplers are another popular choice for their smaller size, enhanced insulation capability and reasonable cost. The fastest optocouplers available today can transfer data at rates of up to 50Mbaud, handling medium-speed data transmission while providing control-signal isolation.

In the past few years, families of miniaturized multichannel high-speed digital isolators have been introduced for medical applications by a few semiconductor suppliers. Digital signals are coupled through on-chip microtransformers or isolation capacitors. The couplers are available in both single and multichannel configurations. Thanks to the speed improvements and the increase in channel density it is possible to build smaller and cost-effective medical imaging devices.

While new isolation technologies are breaking limits in speed and channel density, their isolation robustness is seen to be compromised due to the following observations:

1. Most insulation layers built on the CMOS IC chip are thinner than 20µm. Such insulation layers can be subjected to very high electrical field strength (V/µm) in which the aging mechanism of insulation material is yet to be understood and proven.
2. Most isolators built with “isolation-on-chip” technology break down under 12kV

of HBM (human-body model) ESD stress.
3. A single layer of thin-film insulation does not meet requirement for two means of protection.

To benefit from IC technology advances without compromising insulation quality Avago Technologies recently developed a high-speed multichannel digital isolator family, the ACML-74xx, based on a “transformer-on-flex” technology. The isolators are implemented with CMOS input buffers and CMOS output drivers to eliminate the need for both input limiters and output pull-up resistors. Additionally, refresh circuitry is built in to ensure DC correctness.

When a data stream is fed into the “transmit” side, the logic signals are converted to current pulses (Figure 2). The pulses create the electromagnetic field that is coupled across the insulation barrier to the receive coil. The receive coil translates the pulsed EM field into voltage pulses that the differential-input receiver will translate back into logic signals to recreate the data stream.

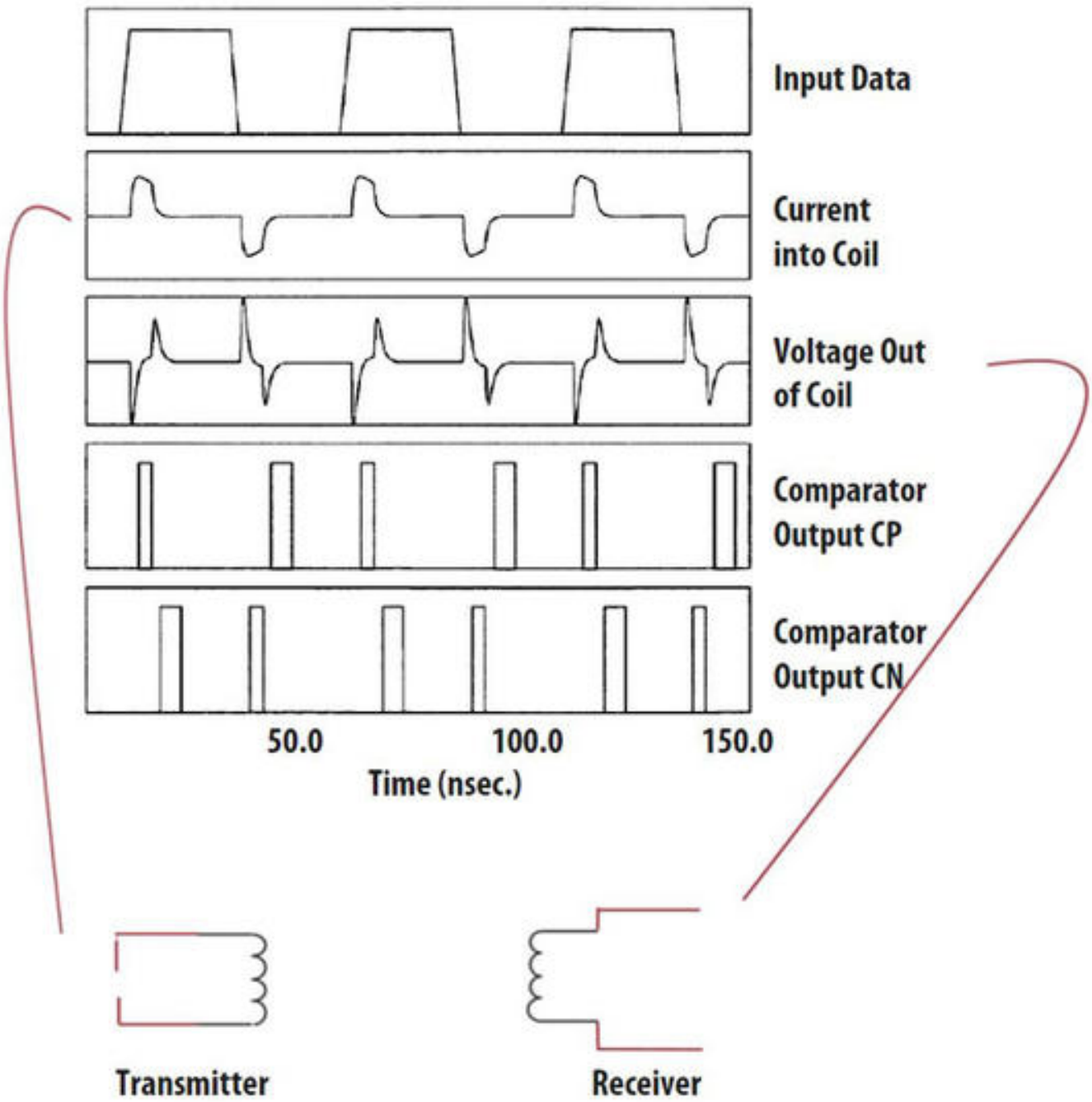

Figure 2. To get across the galvanic isolation barrier, the data inputs are converted into current pulses in the transmitter's primary coil. On the receive side the electromagnetic field generates voltage pulses that are converted back into the data.

The isolators have CMOS-logic-compatible inputs and outputs and can operate from 3.3- or 5-V supplies. When idling using a 3.3-V supply, the chips consume less than or equal to 10 mA/channel on the input side, and less than or equal to 11 mA on the output side. With a 25 Mbaud data stream the input supply current jumps to about 17 mA, while the output supply current increases to a similar value. With a 100 Mbaud data stream, supply currents increase to about 30 mA on the input and output sides. Supply currents are slightly higher with 5-V power sources.

Pulse width distortion is less than 3 ns, which minimizes potential data transmission errors. Additionally, the transmitter provides a differential output and the receiver has differential inputs, thus maximizing common-mode noise rejection and allowing

the channel to provide a cleaner signal.

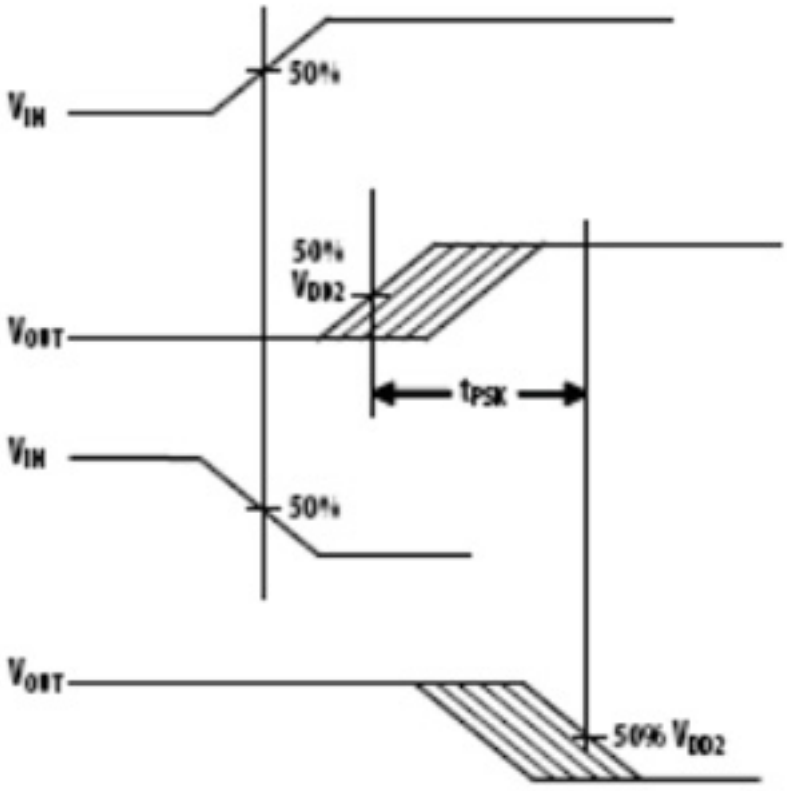

Figure 3. Propagation delay skew, tPSK, is a critical parameter when data channels transfer data in parallel. The skew is defined as the difference between the minimum and maximum propagation delays, either tPLH or tPHL for any given group of isolators.

Propagation delay skew, tPSK, is an important parameter to consider in parallel data applications where synchronization of signals on parallel data lines is a concern. If the parallel data is sent through a group of isolators, differences in propagation delays will cause the data to arrive at the outputs of the isolators at different times. If this difference in propagation delay is large enough it will determine the maximum rate at which parallel data can be sent through the isolators.

Propagation delay skew is defined as the difference between the minimum and maximum propagation delays, either tPLH or tPHL for any given group of isolators that are operating under the same conditions (i.e., the same drive current, supply voltage, output load, and operating temperature). As illustrated in Figure 3, if the inputs to a group of isolators are switched either ON or OFF at the same time, tPSK is the difference between the shortest propagation delay, either tPLH or tPHL and the longest propagation delay, either tPLH and tPHL.

The ACML-74xx series isolators offer the advantage of guaranteed specifications for propagation delays, pulsewidth distortion, and propagation delay skew over the recommended temperature and power supply ranges.

Similar to other multichannel high-speed digital isolators, the digital input signal is coupled through high-speed microtransformers. However isolation between primary and secondary coils is based on flex tape, which is made from a polyimide material commonly known as Kapton. Unlike “isolation-on-chip” technology, the polyimide tape is much thicker – about 50 µm. Such tape has been widely used for insulation purposes in medical and industrial applications for many years. With the additional 30 µm of insulation adhesive between coil and tape, the total distance through insulation adds up to 80 µm, a thickness approaching the isolation distance in many optocouplers. As a result, the insulation property and dielectric strength are similar to that of optocoupler, which is well understood and proven since its first introduction in early 1970s.

Conclusion

Medical imaging devices require high speed and multichannel digital isolators to transmit large quantity of data from isolated patient circuits to image processing circuits. While many of latest isolation-on-chip technologies are providing promising digital isolators meeting demands for high speed and high channel density it is critical to select right isolation components without compromising on insulation quality. Besides complying with the medical safety standards IEC60601-1, the high ESD rating across isolation and multilayer insulation are crucial for patient safety and tolerance of human mishandling and material defects.

The latest high-speed digital isolators are built on fault tolerant multilayer insulation material with very high ESD handling capability. Operating at high data rates in multichannel configurations, they provides an ideal choice for next-generation medical imaging devices.

Source URL (retrieved on *04/24/2014 - 9:55pm*):
http://www.ecnmag.com/articles/2012/09/design-safe-endoscopes-and-medical-imaging-devices-high-speed-digital-isolators