To improve reports, use diagrams wisely

Jon Titus, Technical Contributor

This column offers tips about how to avoid common problems with charts, diagrams, and other graphic information. Engineers use diagrams routinely, but although the detailed schematic diagram on your lab bench accurately represents your work, in the same form it might have too much information for a monthly progress report or a conference paper.

1. Ensure you include all the necessary information in diagrams, charts, and equations. Nothing irks me more than an article or report that all of a sudden includes something new and without explanation. Recently I started through a series of math steps in an article and found the author introduced a new term halfway through. No information in the text described where that term came from or what it represented. Don't skimp on the details, and don't make jarring jumps in stepwise information.

2. Don't include unused information. When I edited electronics articles I often found authors would simply cut a diagram out of a data sheet or application note. Those diagrams included too much information, such as the name of every functional block, or sections not mentioned in the article text. Undefined acronyms and abbreviations can cause confusion. Readers wonder if related information has gone missing or if they should already know what those labels in a diagram mean. If information in a diagram doesn't support your writing, leave it out.

Schematic diagrams in documents and reports often suffer from information overload. When you write a report, an application note, or create a presentation, unneeded component information can confuse your audience. Label only the components referred to or used to illustrate a concept.

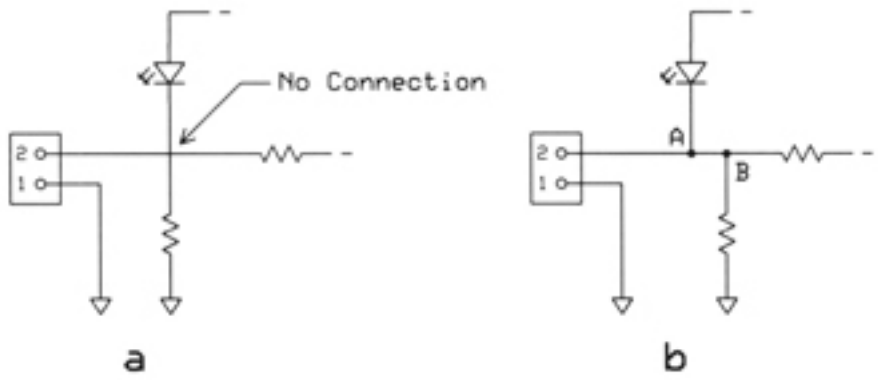

Figure 1. The junction of two lines (a) should indicate only a "fly-over," not a connection. If you need a connection of four signals, move them apart and create two 3-way connections (b).

3. Avoid ambiguities in schematic diagrams. First, use a schematic-capture program to draw good circuit diagrams. Neatness counts. If you don't already have schematic-capture software, you can find inexpensive, free, and demonstration programs that work well. Demo programs usually have a diagram-size or number-of-elements limit. Second, recheck your diagram for errors. Third, make only three connections at one point. If someone redraws your circuit diagram, it becomes obvious a connection exists when three signals meet, as shown in Figure 1. Suppose you use a four-signal connection. When redrawn for publication, or due to poor image resolution, people might wonder whether they see a four-way connection or a fly-over of two separate signals.

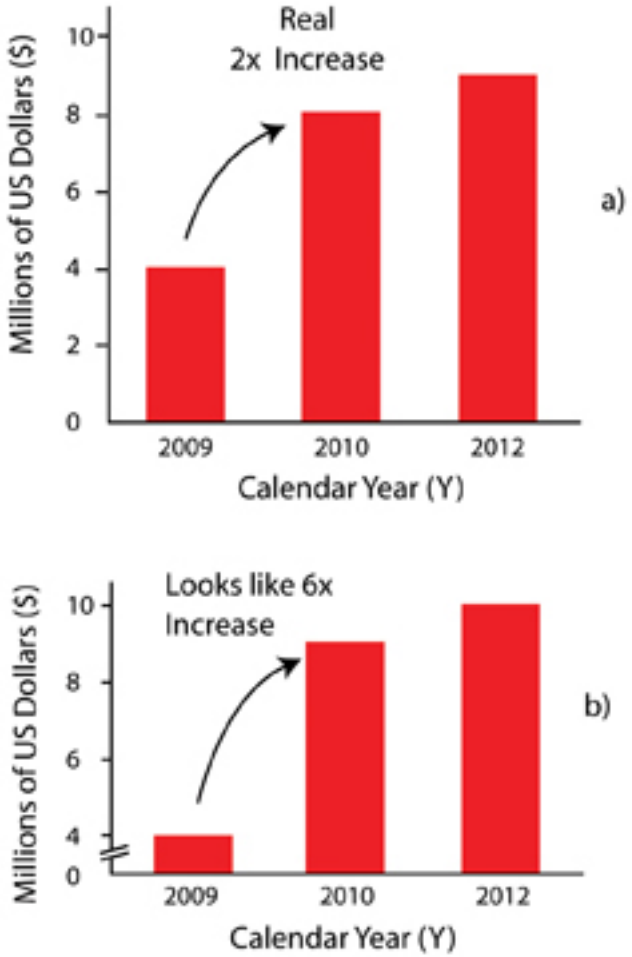

Figure 2. The bar chart with a complete Y axis (a) shows real relationships. If you truncate an axis (b) ensure your audience understands the break in values, otherwise they see what looks like distorted information.

4. When you plot data, label each axis with a unit (Volts) and the abbreviation (V). Many diagrams on the Internet fail to label axes, so readers wonder what the graph shows. Graphs also make it easy to distort data, either inadvertently or on purpose. Figure 2 shows a bar chart that represents sales of $4M, $8M, and $90M for three years. A graph that starts at $0 shows the real trend. But if the chart starts at $3M without carefully noting a break between $0 and $3M, the jump from $4M to $8M appears out of proportion to the actual increase.

5. Do not use pie charts. The pie-slice portions of this type of chart make it difficult to compare values. Use a bar chart instead.

6. Do not add a third dimension to graphical data. A shadow or depth in a bar chart, for example, might look nice, but the dimension of depth adds nothing useful to the data.

7. If possible, use a professional photographer to take pictures of components, apparatus, or products. When you must take your own photos, use an appropriate camera setting for a depth of field compatible with your product's dimensions. You want everything in focus. Use a polarizing filter to minimize reflections. Learn about

photographic lighting techniques and equipment.

8. Not everyone sees color perfectly, so use colors almost everyone can differentiate. On charts and plots, for example, use symbols along with color to indicate data points. Instead of using, say, a green arrow to point to something, use a black arrow and label it 1, A, or something else and refer to it by its label, not its color. Avoid placing red and blue areas next to each other. Our eyes have a chromatic aberration that causes them to focus on red and blue different. Rapid refocusing on red and blue areas in a diagram or image can cause eye strain. For colorblindness information, visit: http://en.wikipedia.org/wiki/Color_blindness.

I highly recommend the book, "The Visual Display of Quantitative Information," by Edward R. Tufte as a reference for anyone interested in properly using diagrams, plots, and charts. For more information, visit: http://www.edwardtufte.com/tufte/books_vdqi.

You also might enjoy, "Resonate: Present Visual Stories that Transform Audiences," by Nancy Duarte, John Wiley, 2011. ISBN: 978-0470632017.

Reference

Zinsser, William, "On Writing Well," Harper Perennial, 2006. ISBN: 978-0060891541.

Source URL (retrieved on *08/29/2014 - 8:54pm*):
http://www.ecnmag.com/articles/2012/06/improve-reports-use-diagrams-wisely