Capacitive sensing-based light control user interfaces

Pushek Madaan, Cypress

Smart lighting control technology is being used in more and more consumer applications to allow control of light intensity, hue, and saturation. Figure 1 shows a block diagram of a basic lighting control application with an ambient light sensor to automate control based on the current environmental light.

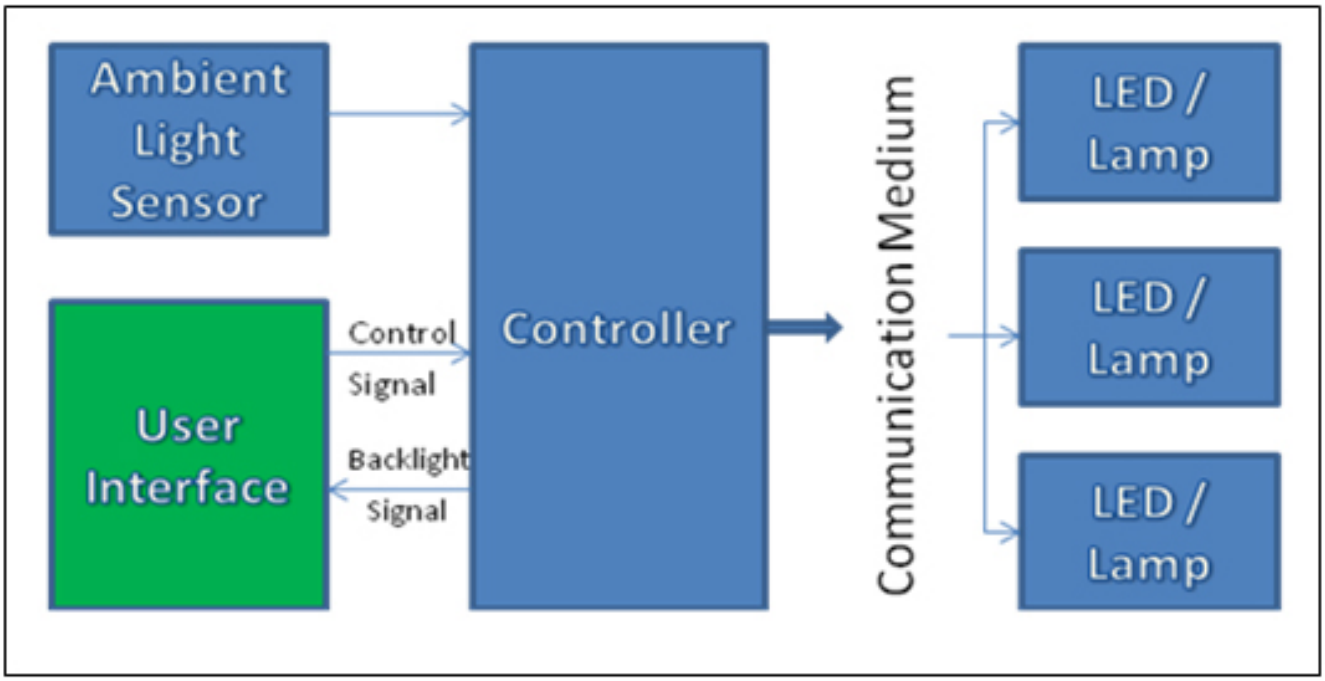

Figure 1. Block diagram of a basic ambient light controller

With the number of competing light control systems on the market, the user interface is often the major differiator between systems and determines the success or failure of a consumer product. By moving away from bulky designs with a multitude of keys to sleeker designs based on capacitive touch button/slider controls, OEMs can provide not only an attractive front panel but also make systems more robust, jitter-free, and cost-effective.

Capacitive sensing
Capacitive sensors are implemented on PCBs in the form of copper pads with an insulating overlay that protects each sensor from ESD and users from electric shock. When the user touches the overlay over a sensor, the capacitance of the sensor changes. Figure 2 shows a simple implementation of detecting change in sensor capacitance.

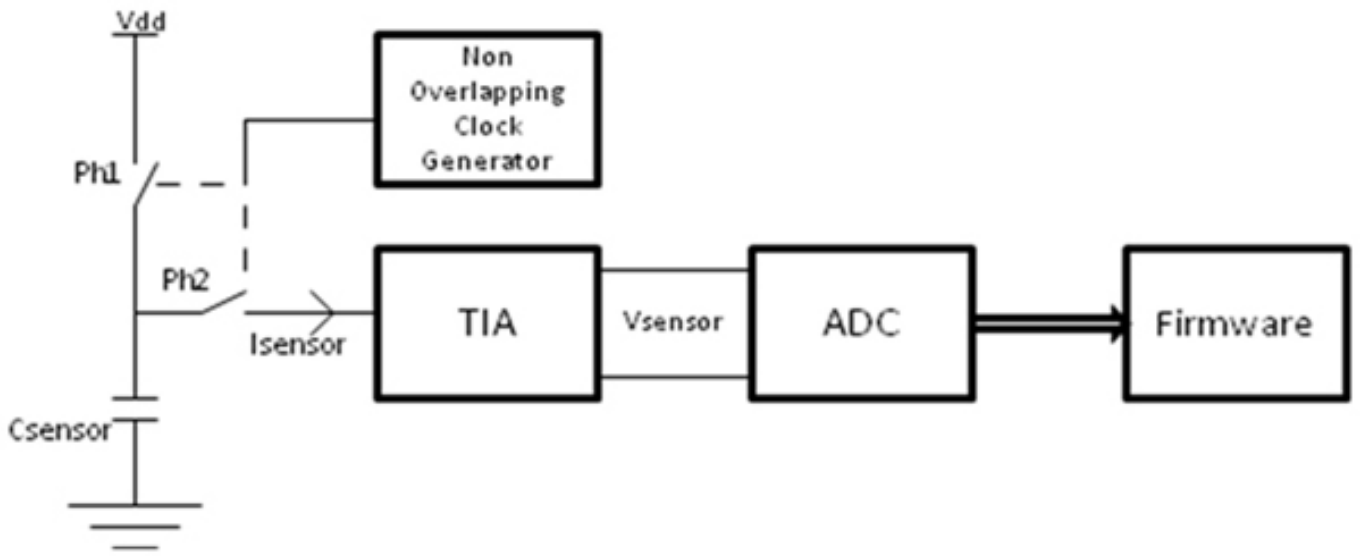

Figure 2. Basic architecture of Capacitive-sensing technique

An increase in sensor capacitance reduces the circuit's resistive value to vary the current I sensor. This current is amplified and converted to a voltage signal for further processing. A fast ADC, typically a SAR ADC, can be used to digitize the voltage signal and detect changes in capacitance introduced by finger capacitance.

Figure 3 shows an implementation of high-performance capacitive sensors using the capacitive sensing Sigma Delta (CSD) method on a Cypress CY8C21x34 PSoC. Since the controller is an SoC, it can be configured to specific applications. Although designs based on SOCs are simple to implement, there are various factors to consider:

1. Wide range of capacitance–Achieved by using a high-resolution ADC or a precise TIA. Use of high-precision analog components, however, increases system cost.
2. Environmental noise –Finger capacitance is very small (typically, < 0.5pf), so even low noise present in the environment can introduce parasitic capacitance that leads to false detects.
3. Change in environment –Humidity and temperature impact capacitance, and the system should be designed to handle their effects.

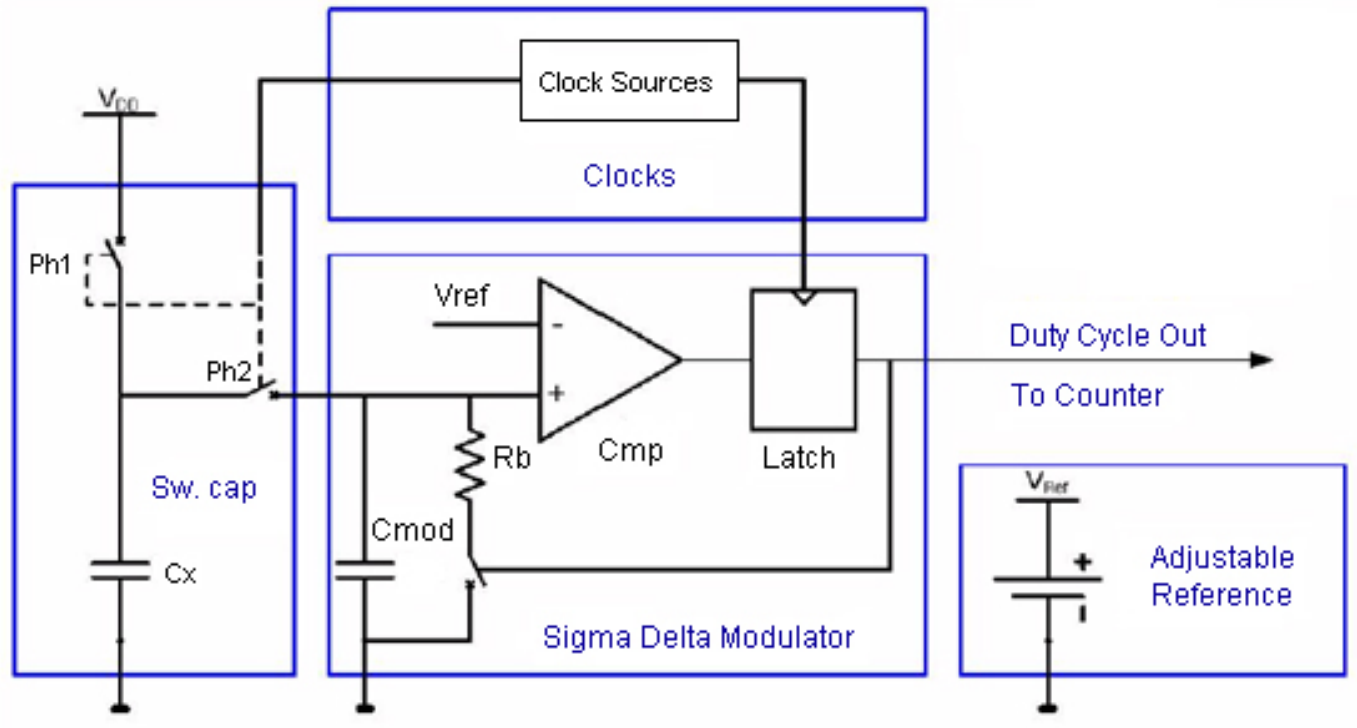

Figure 3. Block diagram of CSD used in CY8C21x34

User interface

A typical user interface for a room lighting control application provides an option to select predefined lighting levels. Some advanced user interfaces allow the user to control individual color components and light intensity (see Figure 4).

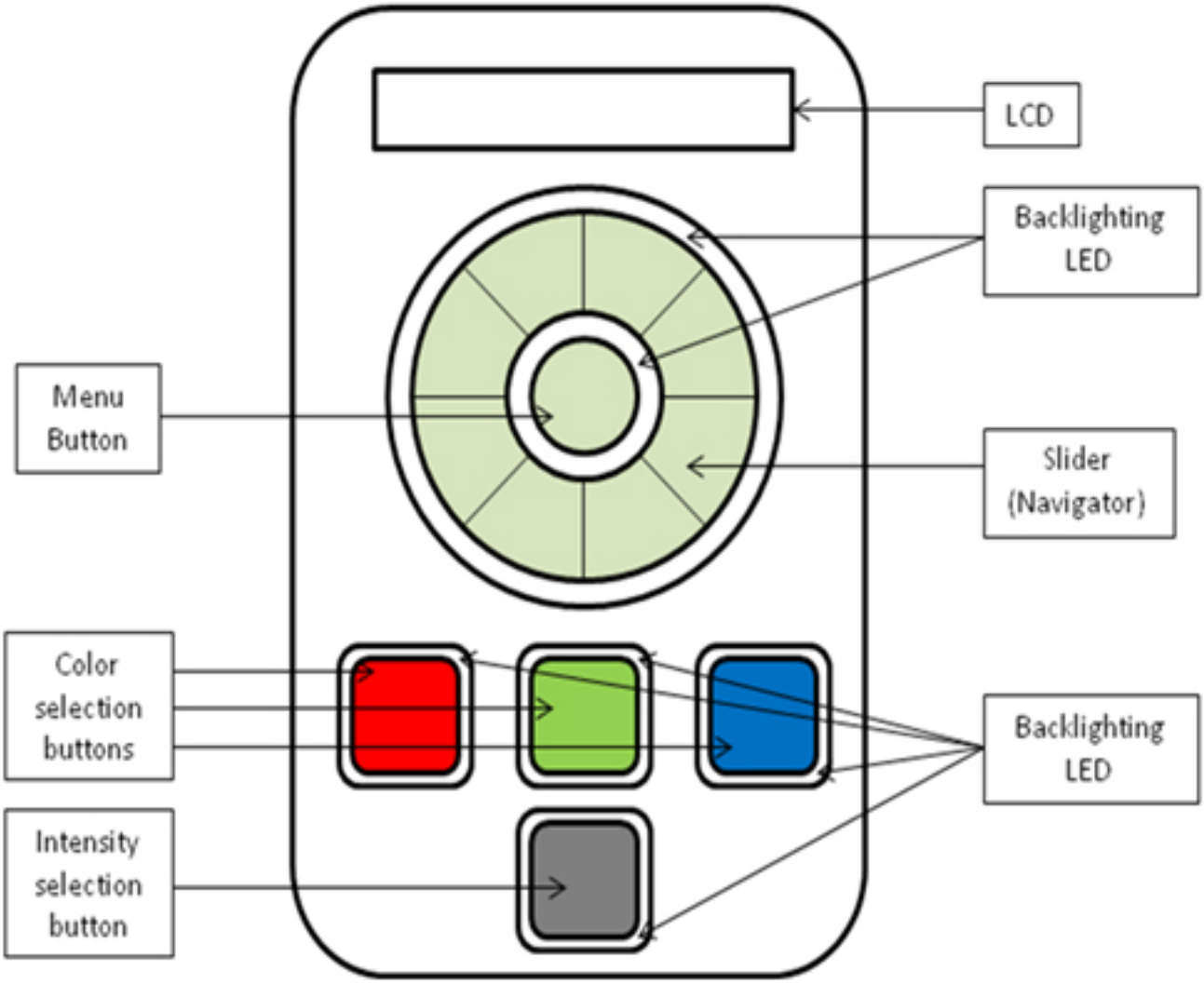

Figure 4. User interface with capacitive sensors

This interface uses has four capacitive buttons to select a particular component of the light. The selected property, such as intensity (if the intensity button is touched) or saturation (if any of the primary color buttons is touched) can be increased or decreased using the radial slider. The radial sensor is also used to navigate through predefined lighting levels. The slider's firmware can be written to sense a touch on the centre of the slider as a different button. This 'extra' button is implemented as a "Menu" or "Select" button. The lighting control interface also has an LCD to display the intensity, saturation, or selected lighting option. Whenever the user touches a sensor or slider, an LED from the bottom layer glows, thus giving feedback to the user that the sensor is active.

Radial slider – in and out

The design of a radial slider on a PCB is relatively straightforward. It can be considered as an assembly of multiple capacitive sensors arranged in a circular pattern. Traversing the finger from the left of a linear slider to the extreme right end will increase the resolution from 0% to 100%. With a circular slider, the application must take into account how many revolutions have to be completed to reach 100% resolution.

Because a finger touches more than one sensor on a slider, its position is calculated by computing the centroid around the sensor with the highest response. The centroid calculation method considers the response of the neighboring sensors as well because they are also touched by the finger. The following algorithm determines how to identify the neighboring sensors of a radial sensor.

Gang proximity sensing and backlighting

Instead of using a separate trace for the proximity antenna, all slider segments can be ganged to form a large sensing pad that can sense proximity. This enables the system to activate the interface backlight whenever a hand approaches the device, thus enabling the user to locate the interface even in the dark. Backlight LEDs are used to increase the visibility of the interface even in the dark. They can be a single color LED or a tri-color LED, which can be given the exact color combination as the ambient light.

Implementing gang proximity sensing can be simplified by connecting all sensor segments to an analog mux. With a mixed-signal device like the CY8C21x34, an internal Analog Mux Bus can be used to connect the external sensors interfaced on different package pins to the internal CSD block using firmware. When the gang sensor detects an object like the user’s hand within proximity of the board, firmware lights the backlight LEDs to enable the user to locate the interface. After switching the LEDs on, the radial slider can be switched back to its normal functionality by disconnecting the sensors from the Analog Mux Bus. Timeout functionality can also be implemented to switch OFF the LEDs if the object/hand moves away from the board for a fixed time.

Tuning of the gang proximity sensors allows configuration of the distance at which the proximity antenna successfully detects an object and switches on the backlight LEDs.

This article described a typical implementation of a user interface for controlling the ambient light using capacitive sensing methodology. Developers can further enhance the model by providing a color gamut which will enable users to select a color of their own choice for light control. Making the light control user interface communicate wirelessly with the controlling unit is yet another way to differentiate the lighting controller.

Source URL (retrieved on *05/21/2013 - 2:48am*):
http://www.ecnmag.com/articles/2012/06/capacitive-sensing-based-light-control-user-interfaces?qt-most_popular=0