Brushless DC motor design can help end users to sleep at night

Wen Chien, Fairchild Semiconductor,www.fairchildsemi.com

Innovative brushless DC motor design for energy-efficient motion control applications can help you to sleep at night

Energy efficiency continues to drive electrical standards and designs across industries and applications, as does the increasing consumer-led demand for electronic devices that deliver ever improving performance and superior user experiences.

For example, motion control is a key requirement in many of today’s household electronic appliances, such as tumble driers, washing machines, refrigerators, air conditioners and various kitchen gadgets. Deploying new and improved motor control techniques are critical in enabling these devices to perform at optimized levels. Further, not only do we all benefit from using energy more efficiently, but new techniques can also deliver added advantages including smoother operation and significantly reduced acoustic noise levels.

Manufacturers are acting to meet these challenges, and we have noticed a trend away from low efficiency AC induction motors towards high efficiency alternatives such as brushless DC (BLDC) and Permanent Magnet Synchronous Motors (PMSMs).

This is particularly evident in the manufacture of ceiling fans. Traditionally, ceiling fans have a tendency to run erratically and can be quite noisy: the last thing you need when you’re trying to sleep on a hot and steamy night. This application is one where BLDC/PMSM motors can really make a difference, due to the high efficiency, high power density, high torque and low acoustic noise that these innovative motors deliver.

But, unlike AC induction motors and DC brush motors, BLDC motors must be incorporated into the electronic control circuit to work efficiently with the rotator and stator to drive the motor. For some ceiling fan manufacturers, this can pose a technological challenge either in the design of the control circuit or motor, or both.

The key to achieving the lowest acoustic noise for ceiling fan applications
In order to reduce acoustic noise, efforts must be made to improve the magnetic

circuit design, the structure assembly (Fig. 1)and the driver circuit.

For magnetic circuit design, attention should be paid to reduce the torque ripple in order to make the motor run more smoothly and subsequently more quietly. This can be achieved by improving the back EMF, magnetic flux distribution and cogging torque.

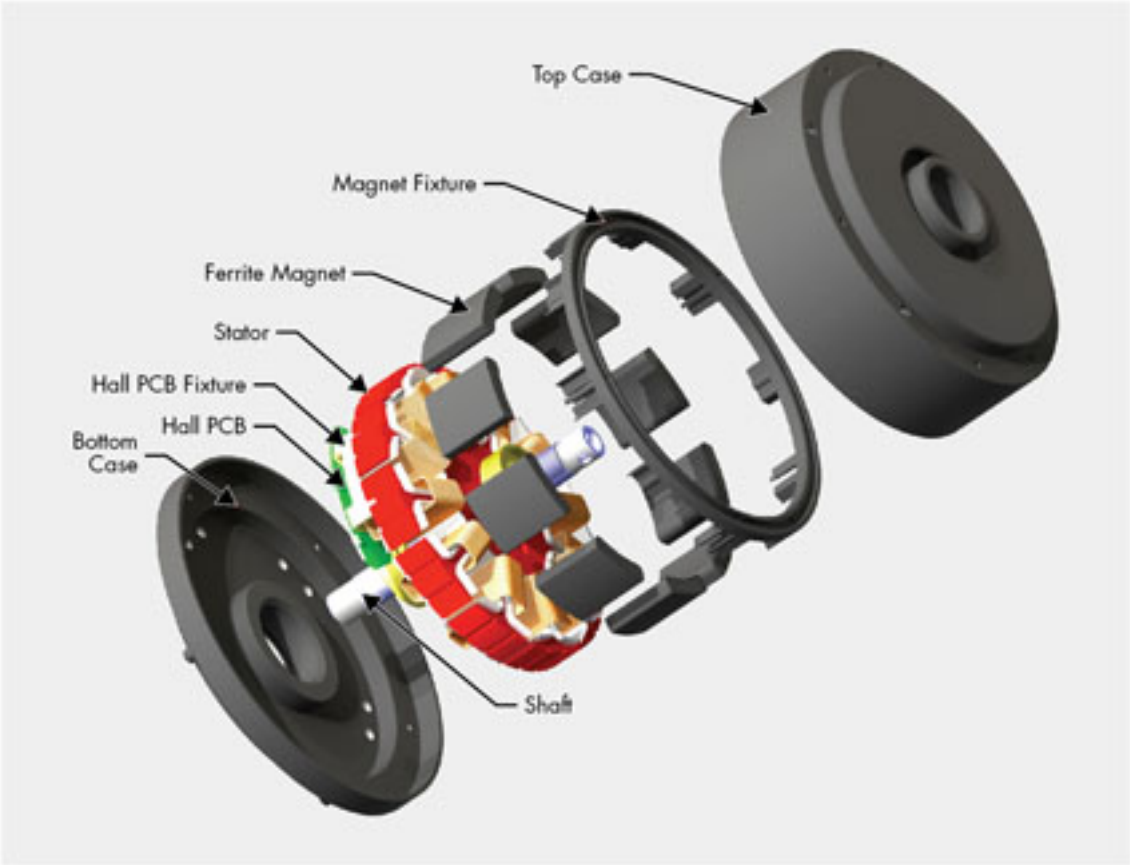

Figure 1. A typical structure assembly for a ceiling fan.

Except for the mounting method of the magnets, the structure assembly requirements of PMSMs are similar to those for traditional motor designs. The structure design, part rigidity, machining accuracy, rotor dynamic balance, fit clearance between bearings and assembly processing remain much the same. However, special attention should be paid to the fact that PMSMs have very high energy density, which means that they are smaller than traditional motors, but deliver the same power output presenting more design challenges to be dealt with.

As for the driver circuit, it is designed to control electronic components to generate the magnetic field that interacts with the rotor to run the motor. The driving pulse can be either square wave or sinusoidal wave. The square wave delivers a 360° magnetic field as six pulses; it is a simple way to implement control, but it is difficult to suppress vibration and noise during phase conversion. The sinusoidal wave can generate a rotating field synchronized with the rotor’s rotating position, making the rotor run more smoothly and quietly. However, it is much more difficult to design.

Integrated solution to reduce design effort and time-to-market

To meet and exceed these design challenges, Fairchild has adopted an innovative approach (Fig. 2) to the design of ceiling fans. The control mechanism enables the

motor to operate in sinusoidal drive at very low speed. The technology includes a space vector modulation (SVM) and an optimal angle enabling the circuit to generate the appropriate sinusoidal wave, which makes the motor rotate both smoothly and quietly.

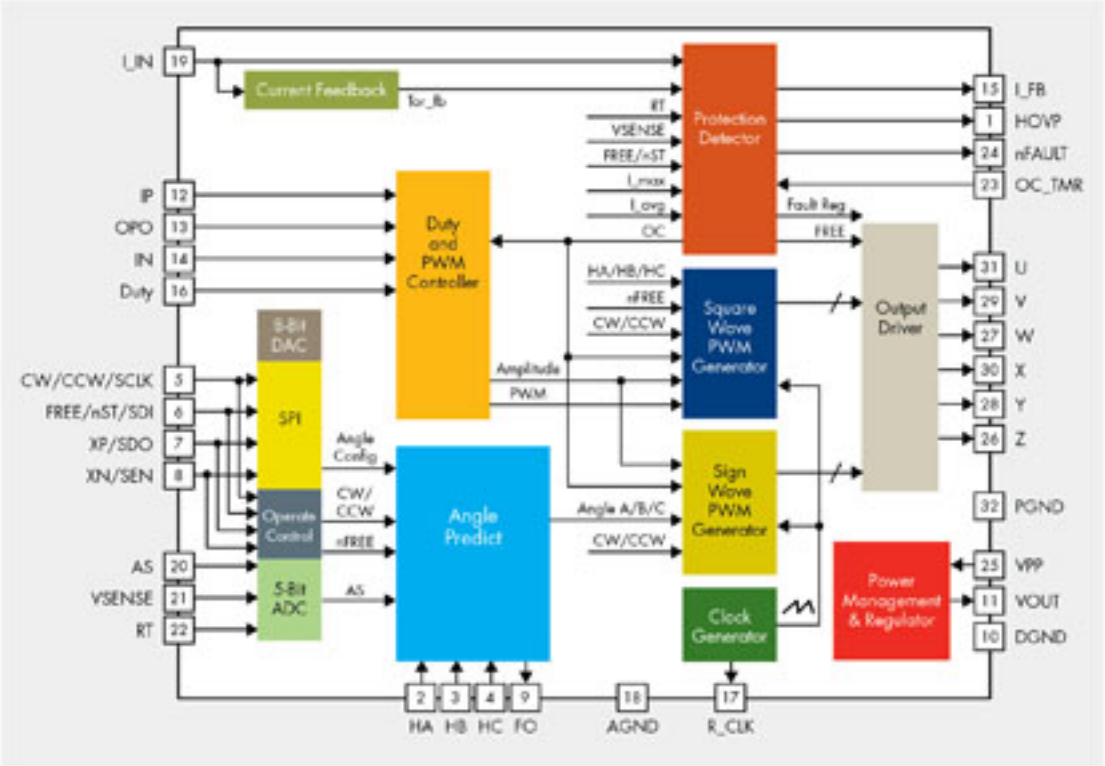

Figure 2. An innovative approach to ceiling fan design.

Fairchild has the expertise and a complete portfolio (Fig. 3) of motor control integrated circuits (ICs), Smart Power Device Module (SPM), and power metal oxide semiconductors (MOSs) to formulate an integrated BLDC solution. These solutions not only address various customer needs, such as getting a good night’s sleep, but can also reduce the design efforts and speed up the time-to-market for manufacturers of ceiling fans as well as other appliances requiring motion control.

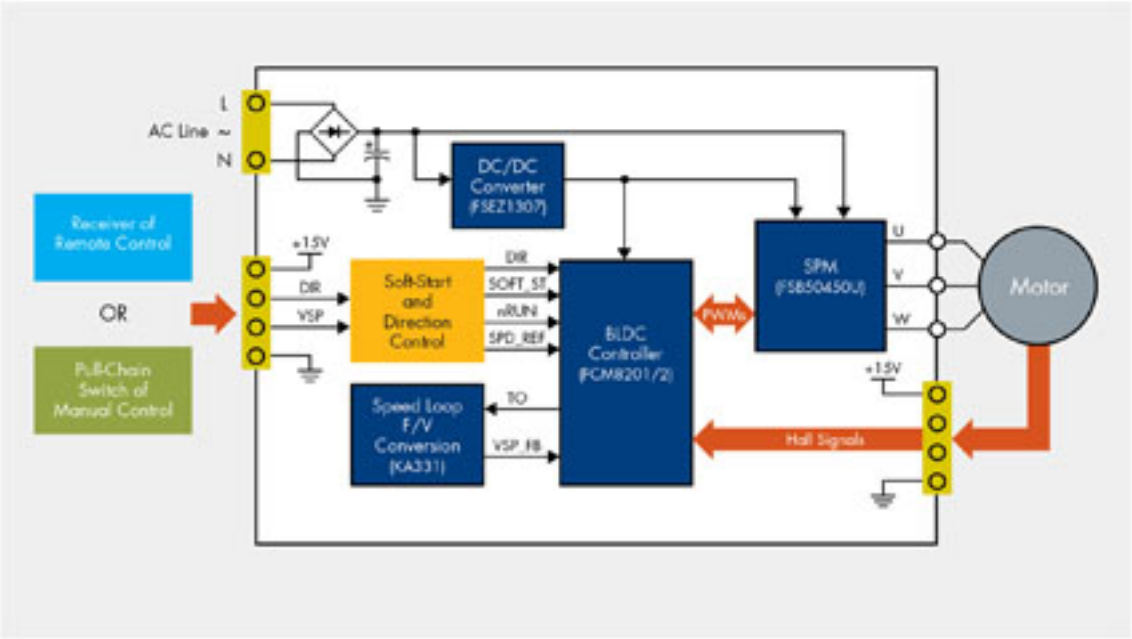

Figure 3. An integrated BLDC solution for ceiling fan applications.

As one of the world's leading global semiconductor suppliers, we are working with our ceiling fan manufacturing customers to highlight how BLDC motors can be deployed to easily address the market demands.

Source URL (retrieved on *10/25/2014 - 4:58pm*):
http://www.ecnmag.com/articles/2012/06/brushless-dc-motor-design-can-help-end-users-sleep-night?qt-recent_content=0