Foundations of the smart grid

Matt Tyler, ON Semiconductor, www.onsemi.com

The smart grid has been a topic of vigorous discussion and intense design and marketing activity for many years. As the smart grid evolves, virtually every supplier of technology is rushing to produce solutions that fit into this complex puzzle. If we strip away the automation and novelty products we are left with one key question: “What are the growth drivers of the smart grid?” At the very foundation there is but one key issue: energy is finite. Recent global events have only served to punctuate this issue: nuclear power generation is losing favor, coal mining is expensive and dangerous, Western economies are too dependent on oil, and not every country has a reliable supply of natural gas. To complicate matters, producers of electricity cannot store their product; limiting their ability to respond to incremental changes in total demand. Therefore, it is essential to smooth out the demand curve and improve overall efficiency. To achieve this goal, producers of electricity are diligently working to install the necessary infrastructure to support tiered billing (cost varies by time of day). This topic may or may not be popular; however, tiered billing seems inevitable. Hence, the smart grid is both the problem and the solution.

Enabling technologies

Energy efficient appliances, lighting, HVAC, even TVs are some of the fastest growing segments of the global economy. Refrigeration accounts for approximately 13 percent of the average home owner’s power usage. This makes the return on investment for a high efficiency refrigerator quite good, but what happens as the unit ages? Age and a lack of maintenance can indeed lead to excess consumption of electricity, which would lead to some unpleasant surprises when the power bill arrives. One possible solution is to measure the power at the load and then compare the actual usage against predicted values. If the data is accurate enough, it is possible to diagnose most common failure modes. Historically, this has been difficult simply due to the cost impact of the measurement circuitry. The next generation of power metrology devices is aggressively tackling this issue. Advanced signal processing and sensor technologies are making it possible to accurately measure the power consumption of an appliance or other AC power load with minimal impact to the cost of the finished device/appliance.

Connectivity solutions are also proliferating in the smart grid space. In some cases, this is the natural evolution of residential and commercial automation systems. These automation systems are paving the way to the connected home/office. Low cost wired and wireless communication solutions are essential for putting information and control at the hands of the home or business owner. Scheduling activity of some loads and monitoring the health or operational status of others all work together to optimize the usage profile and minimize energy cost. The next generation of wireless transceivers uses only a fraction of the power of existing solutions. As automation solutions evolve, both the power consumption and cost are dramatically reduced.

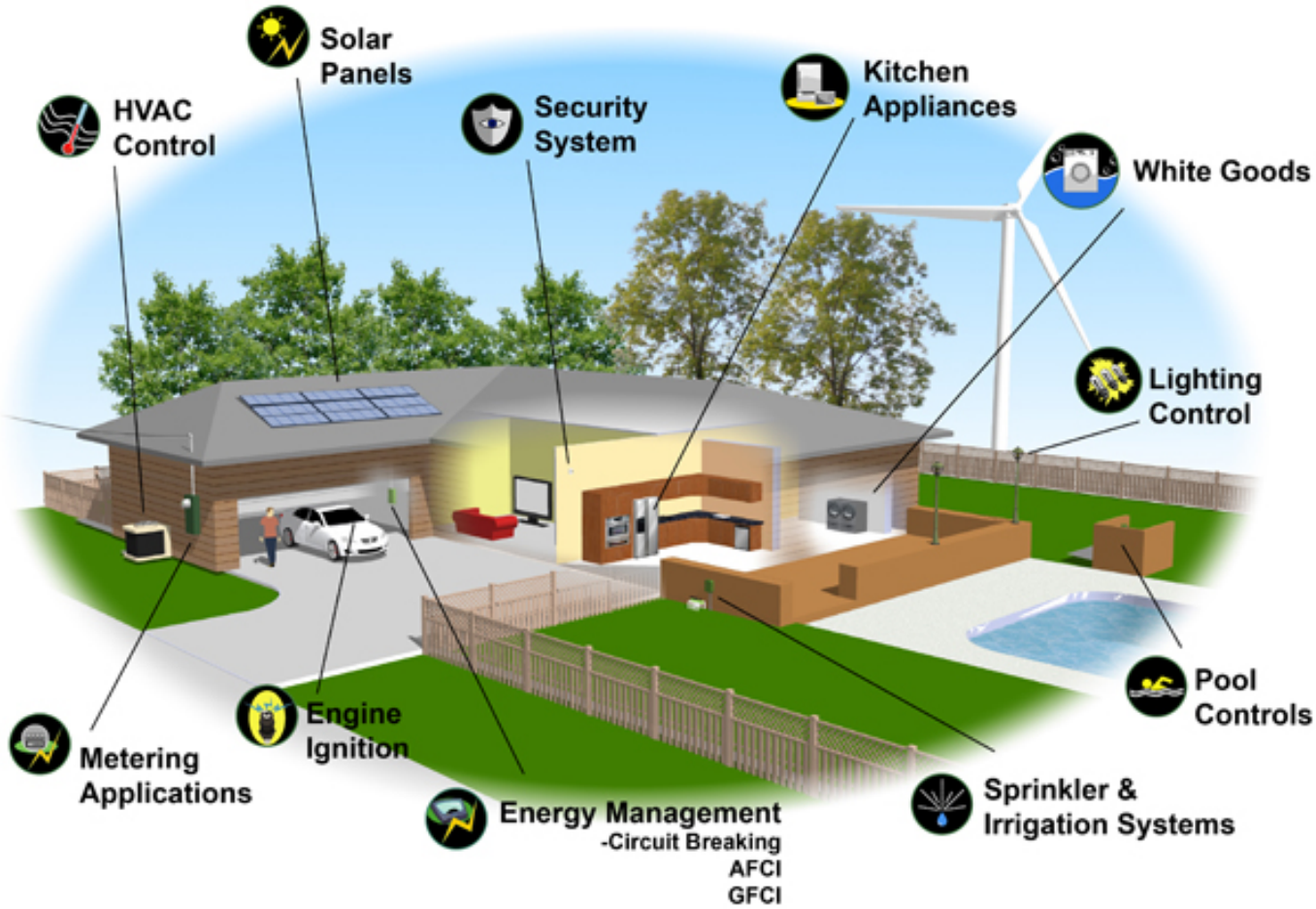

Figure 1. Smart applications in a connected home.

In some environments walls, snow, distance, RF interference and other barriers can create connectivity issues with wireless communication systems. Wired communication methods like power line carrier (PLC), allow connectivity between nodes that traditionally have been difficult to service with wireless solutions. PLC is quickly becoming the solution of choice in many emerging economies for split metering and lighting controls due to its reliability and ease of installation.

Lighting is one of the largest energy usage categories; comprising 35 percent of the average commercial installation’s power budget (approximately 10 percent for residential). Lighting technology has been evolving at an extreme pace, and we now see that LED technologies are approaching maturity. The next step for lighting

control systems blends connectivity and advanced sensor technologies for lighting efficiency that starts to approach theoretical limits. These lighting control systems integrate ambient light sensors (ALS), passive infrared occupancy detection (PIR), and color mixing technologies. Lighting system designers will soon have RF or PLC enabled solutions with true closed loop control that compensates for external light, occupancy, and aging of LEDs. This is accomplished while allowing control of the light systems from smart phones or other common pieces of technology in the home or business. The result is a work and living space that is always illuminated at the optimal level with little or no intervention on the part of the user.

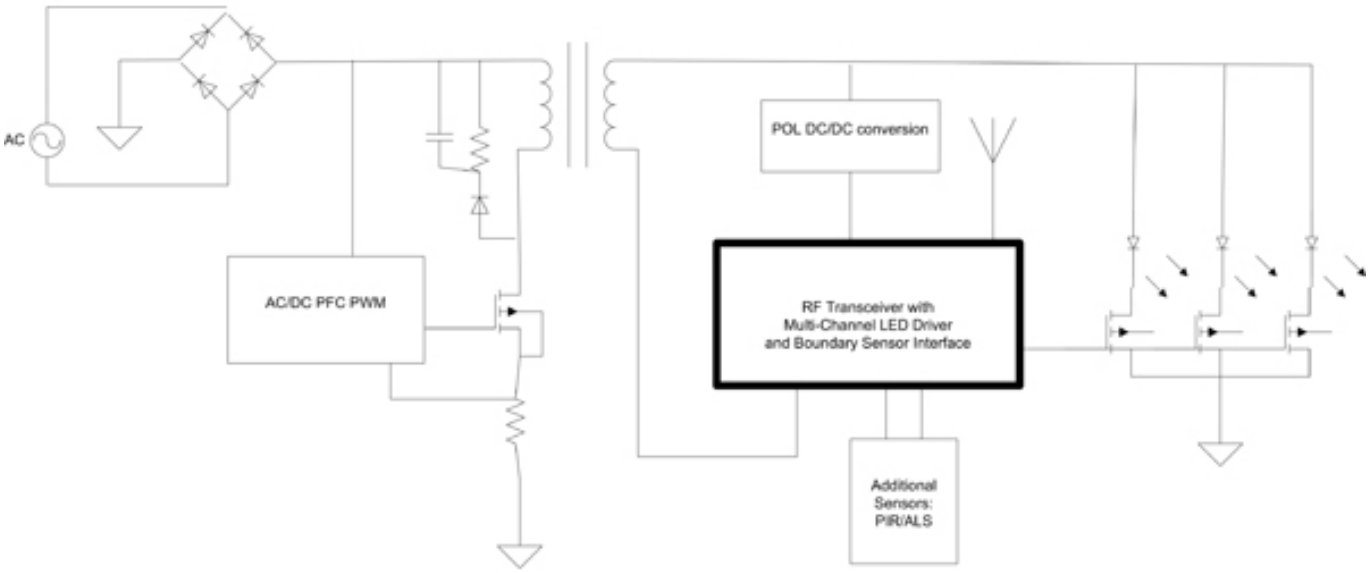

Figure 2. ZigBee-enabled LED controller with ALS and PIR closed loop control.

Conclusion

High-efficiency sensors, communication, and control solutions are currently under development that finally make it possible for entire homes and businesses to be automated at a reasonable cost. All of the building blocks exist today: ALS, PIR, PLC, RF, low cost power sensing technology, and high performance LED lighting controls. Next generation solutions are integrating multiple functions into a single cost optimized device. This degree of automation puts information at the user's finger tips that allows optimization of the energy demand curve while also reducing total usage. Homes and business are well on their way to offering comprehensive diagnostic feedback (much like our cars do today). This will ensure that every piece of the system operations at maximum efficiency and at the proper time of day. The smart grid will give users the control and information to maintain equipment and optimize load activity times while still providing a net cost benefit to the user.

Source URL (retrieved on *04/02/2015 - 6:39am*):
http://www.ecnmag.com/articles/2012/05/foundations-smart-grid