Selecting the best three-phase BLDC motor design technique

Brian Chu, Product-Line Marketing Manager, Microchip Technology

Three-phase Brushless DC (BLDC) motors offer several advantages over other popular motor drive architectures. These advantages — such as a lack of voltage drop across brushes, low acoustic noise and low mechanical vibrations — enable better system efficiency, greater reliability and higher performance. With lowered material costs, these types of motor systems are gaining popularity in automotive, computing and industrial applications.

Trapezoidal and sinusoidal are 3-phase BLDC motor drive architectures that generate different types of Back-Electromotive Force (EMF) and phase current. The additional cost and complicated algorithm associated with the sinusoidal architecture has limited its growth potential in the past, but its smooth rotary motion make it popular for applications that require quiet operation and low vibration. With sinusoidal, the rotor’s position can be detected by using either Hall-effect sensors or various sensorless techniques. The latter reduce system cost, making sensorless a popular approach for new designs.

Common strategies used in developing three-phase BLDC systems are microcontroller-based and standalone analog circuits. Driving three-phase BLDC motors often requires a microcontroller (MCU), a voltage regular and a drive stage, which generates the feedback signal to the MCU. This article will discuss three system strategies for driving three-phase BLDC motors.

A three-phase BLDC system usually contains four fundamental blocks—a power stage to drive the motor; a feedback circuit to detect the rotor position and perform current sensing; a MCU or Digital Signal Controller (DSC) to perform Pulse-Width Modulation (PWM) control and housekeeping; and voltage regulators to power the digital, analog and gate drive circuits. Figure 1 illustrates a three-phase BLDC system. The power stage is driven by three synchronous MOSFET drivers. The motor voltage is managed by six PWM signals through either a standard MCU or DSC, where a sophisticated algorithm is required.

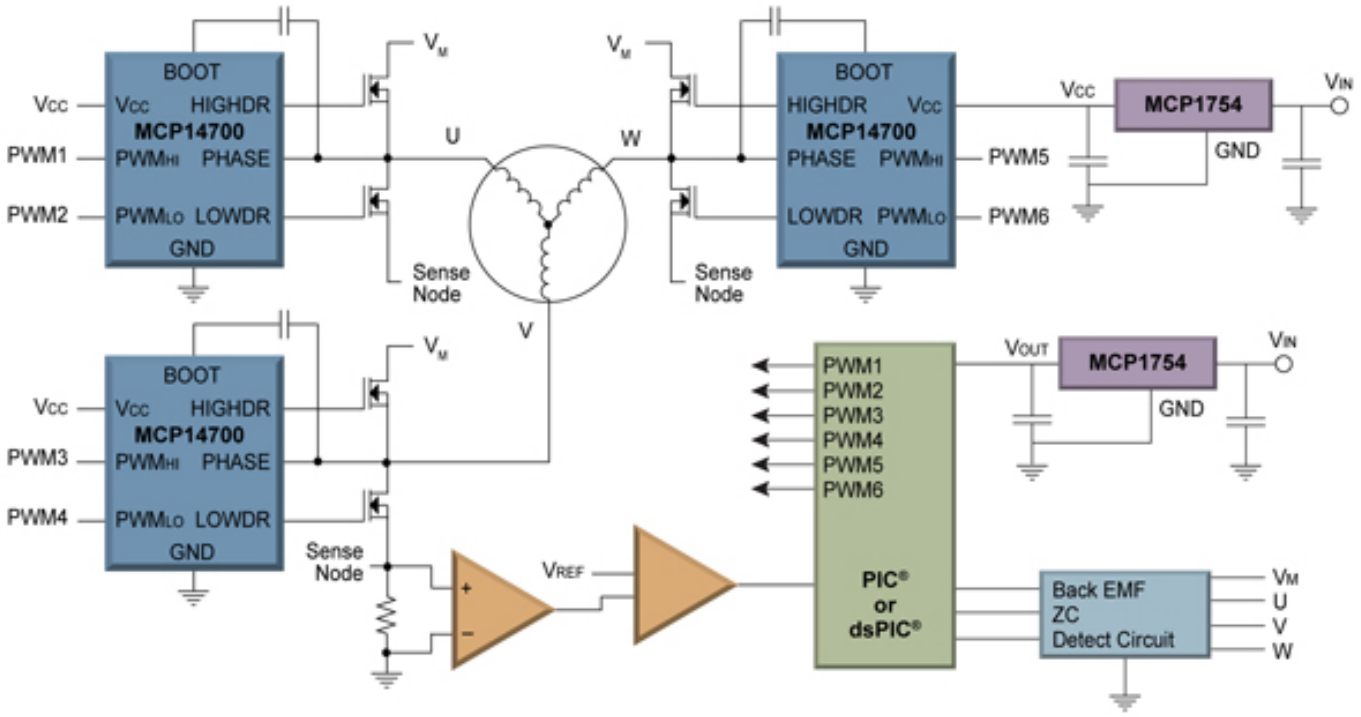

Figure 1. Application Example of a MCU-based Discrete Design for a Three-Phase BLDC Motor

The motor position can be detected using Hall-effect sensors or various sensorless techniques, such as the zero crossing points of the Back-EMF, as shown in figure 1. For sensorless operation, the motor position is determined by the Back-EMF voltage from the undriven winding. The MCU should have the peripherals needed to support the specific application, the drive technique and the position-sensing method. Both the MCU and MOSFET driver require a regulated power supply, which can be provided by a Low Dropout regulator (LDO) when the difference between input and output voltages are moderate. A switching regulator can be used for systems with high input voltages, to reduce power dissipation.

Unlike the circuit in Figure 1, a MCU-based three-phase BLDC pre-driver with a companion IC to perform power management demonstrates a much simpler design. As shown in Figure 2, three main functional blocks are integrated into a single device that drives a three-phase BLDC motor. The power-management unit powers internal blocks and external devices, such as the MCU, DSC, hall-effect sensors, etc. The motor-driver unit often includes a pre-driver circuit, to drive external MOSFETs or IGBTs, a sensing and detection circuit, and communication peripherals, etc. Typically, a pre-driver is scaled to drive the target applications. Thus, each solution is limited to its gate-drive capability and voltage specification. Various communication peripherals, such as SPI, CAN or LIN, are integrated into the pre-driver if required by the application. The 3rd block is a control unit. MCU suppliers offer dedicated peripherals for motor-control applications to optimize the system performance. There are also solutions that integrate the controller and pre-driver into one package, resulting in a smaller-footprint design. One disadvantage of the fully-integrated solution is that both the I/O and computing power are fixed, limiting the design’s flexibility.

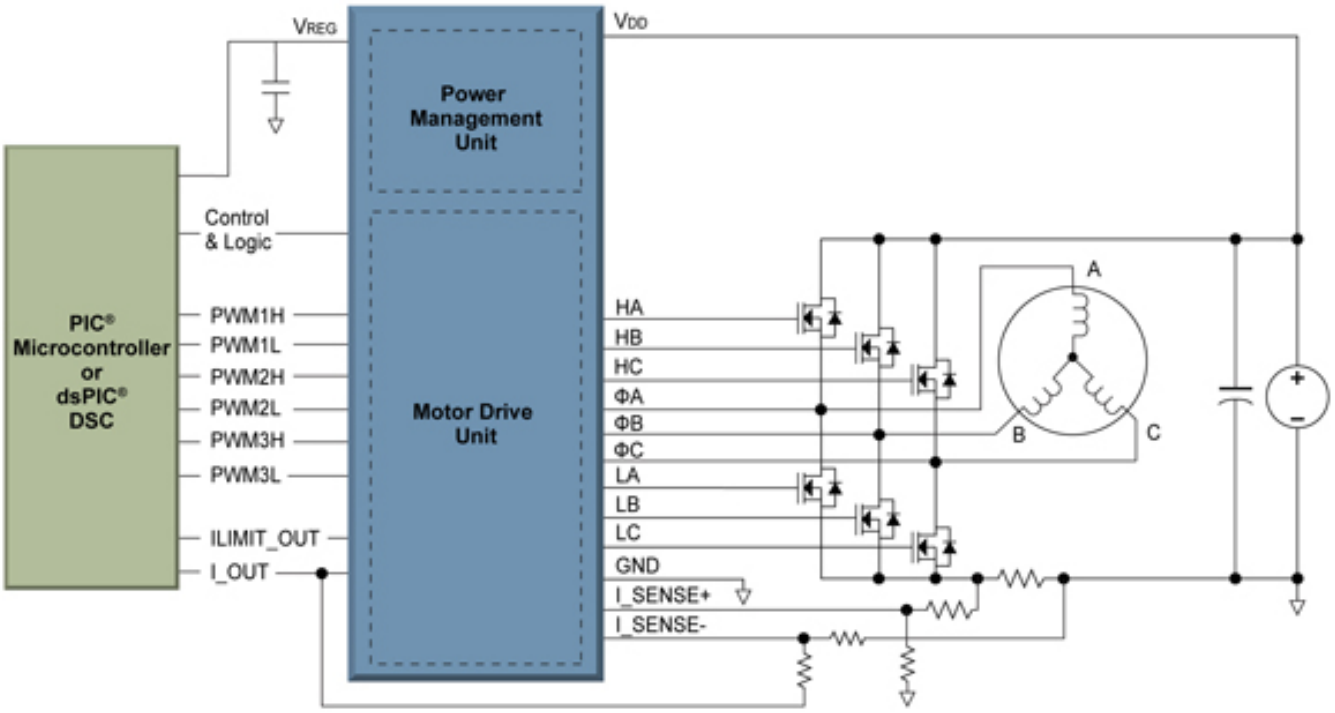

Figure 2. Example of MCU-based Pre-driver Design for 3-Phase BLDC Motor

Today, the amount of PCB space consumed and the thickness of the enclosure are concerns for many three-phase BLDC applications. An integrated three-phase BLDC motor controller reduces system complexity and helps to meet the minimum PCB space requirements. However, the maximum motor drive strength is limited by its power dissipation, package selection and the silicon design. Highly integrated solutions for three-phase BLDC motors are typically considered Application-Specific Standard Products (ASSPs). These devices are less flexible if a motor's specifications are outside those of its original design.

Figure 3 demonstrates a highly integrated three-Phase BLDC motor controller for fan-driver applications. This design requires only two external components to sinusoidally drive a three-phase BLDC motor. When there is no MCU in the system, it operates in an open-loop manner, where the motor's speed is controlled by the external voltage applied. With a MCU or Central Processing Unit (CPU) in the system, it operates in a closed loop, with the Revolutions per Minute (RPM) feedback coming from the FG pin of the device, while the PWM pin controls the speed.

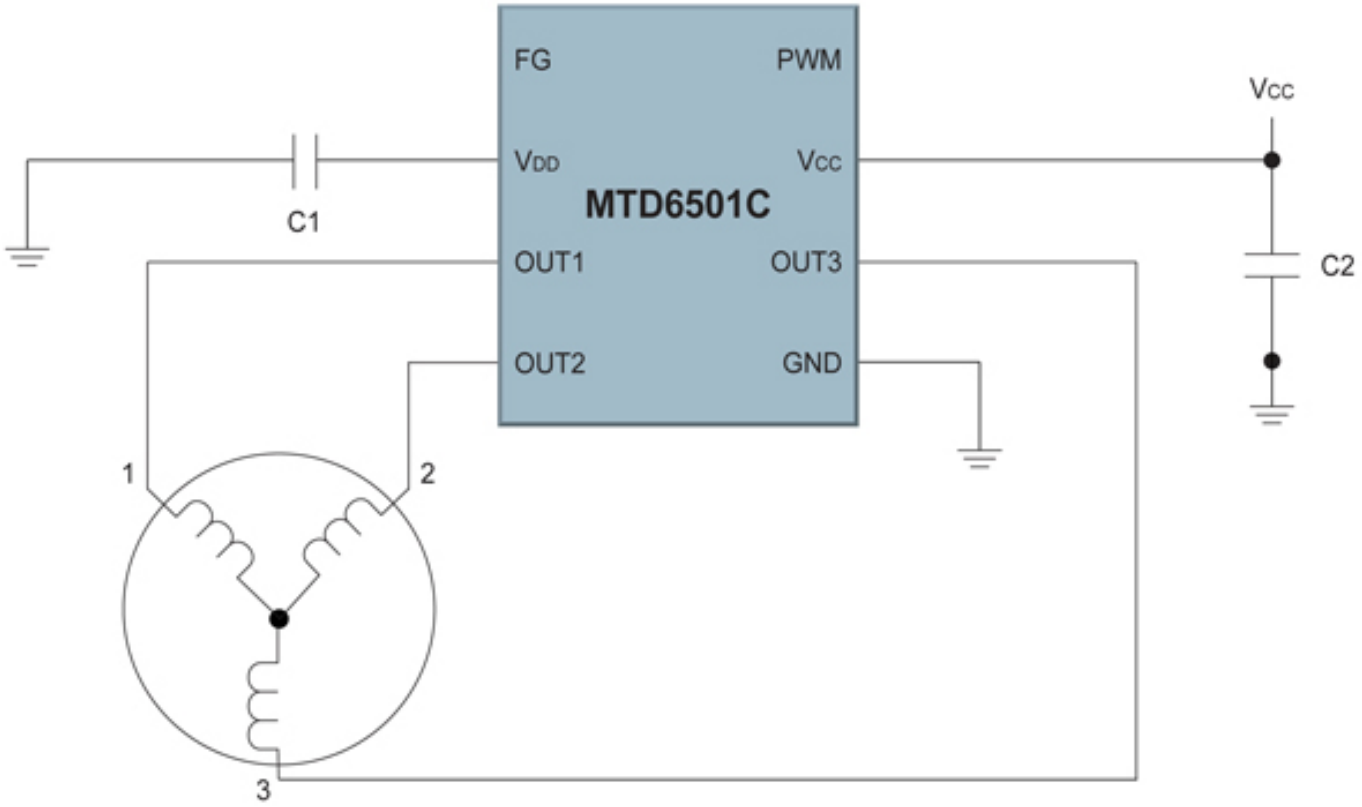

Figure 3. Example of Integrated 3-Phase BLDC Motor Solution

Three-phase BLDC motors provide efficient, reliable and smooth operation, without a mechanical commutator. Because of their mature manufacturing processes and better price-to-performance ratios, three-phase BLDC motors are ideal for applications that require low vibration, low noise and high efficiency.

Table 1 shows the pros and cons of MCU-controlled designs versus standalone solutions. An integrated solution enables shorter time to market and lower costs, when its specifications meet the requirements of the target application. In order to assist designers in optimizing performance and reducing develop time, many semiconductor suppliers offer firmware libraries and MCUs or DSCs with peripherals that enhance three-phase BLDC motor control. Selecting an appropriate three-phase BLDC motor design strategy allows system performance to exceed standards while controlling cost.

	MCU + Discrete Circuit	MCU + Pre-driver	Integrated Solution
System Complexity	High	Moderate	Low
PCB Board Space	Large	Moderate	Small
Firmware Development	Yes	Yes	Either
System Flexibility	High	Moderate	Low
Required Design Experience	High	High	Moderate
Easy Adaptation to Different Applications	High	Moderate	Low

Table 1. Pros and Cons of MCU-based Designs vs. Standalone Solutions

Source URL (retrieved on *09/02/2014 - 1:39am*):
http://www.ecnmag.com/articles/2012/04/selecting-best-three-phase-bldc-motor-design-technique?qt-most_popular=0