Renewable energy and smart grids rely on optical electronics technology

Chun Keong Tee, Avago

Renewable power generation technologies based on solar and wind are usually discussed in terms of photovoltaic arrays and very large land- and sea-based turbines. Behind these very visible physical structures that can encompass many acres sit the optoelectronic components that provide the galvanic isolation, reliability, low maintenance, and control and communication networks that make renewable energy commercially successful.

Optoelectronic components such as optocouplersisolate the high voltage power conversion modules from the low voltage control and communication functions in both utility sizeand residential renewable energy installations. These optocouplers include IGBT/Power MOSFET gate drivers, current sensing isolation amplifiers and digital couplers. Fiber optic receivers, transmitters, Fast Ethernet transceivers and fiber cableprovide long range communication and control data links that are immune to electromagnetic interference producedduring power generation.

Home alternative energy systems based on solar and wind power are becoming more popular among consumers. But in order to achieve the product lifetime that consumers demand and ensure user safety, engineers must build-in protection against short circuits and other failures. Optoelectronic isolation and communication components satisfy the fail-safe needs of power converters and control systems.

A home alternative energy system typically has several major components that must work together for optimum efficiency and lowest cost (Figure 1). Solar panels are a common power source. Wind generators, although less common, are also used in home systems, both alone and to supplement solar panels as primary power sources.

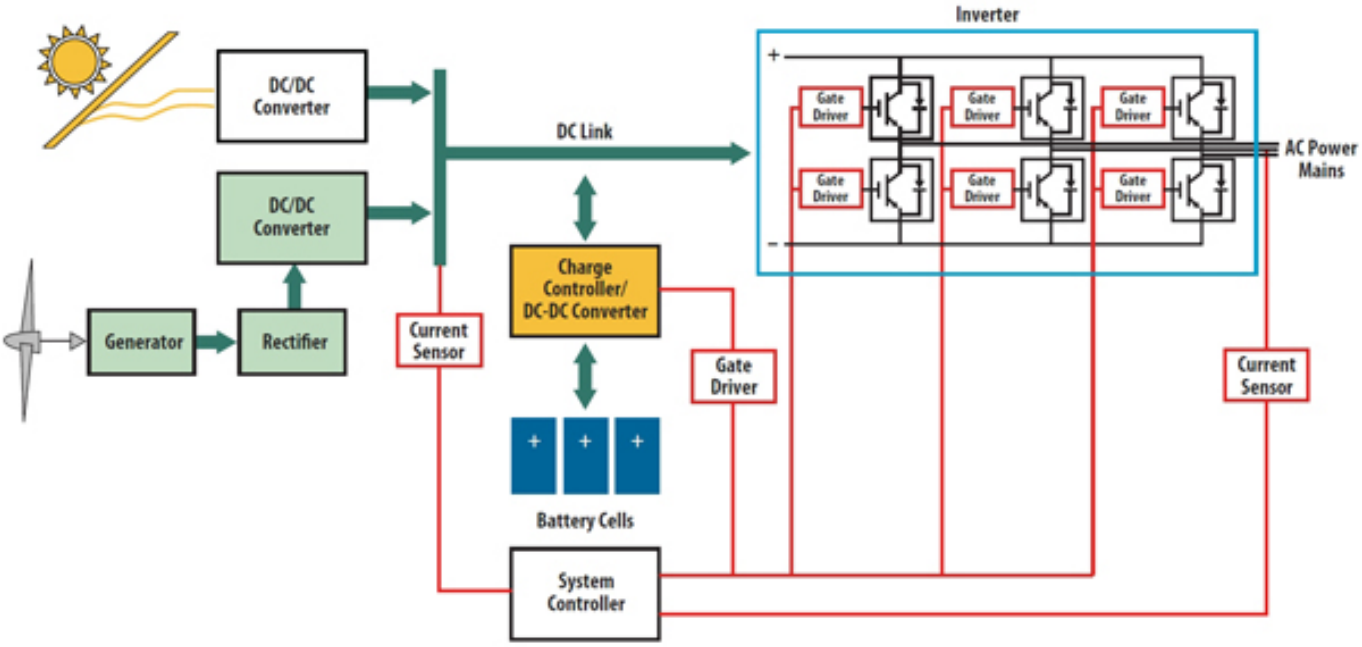

Figure 1. Renewable power generation and optical isolation for switching and control

The inverter, which converts the generated DC power to AC power, plays a central role in power generation. It must be very reliable to achieve the 15 to 20 year productive lifetime that consumers need to justify the installation and system costs and should be immune to accidental damage asits failure would create an expense nearly ten percent of the initial system investment.

To provide this reliability and protection, the inverter must include circuitry to protect IGBT inverter switches from short-circuits on the power mains and user error. Ideally, the IGBT switchingdrive electronics will provide fault protection and isolate the low voltage controller from high voltages and transients.Isolation prevents high DC Link voltage arcing into the control lines, which could damage the controller electronics and possibly injure the user. All sensor lines and signal lines should use optical isolation amplifiers or digital optocouplers.

The power generation system can use fiber optics for on board signal isolation and ground loop prevention. Very long distance remote control and monitoring can occur over reliable, very high speed fiber optic data links.

Isolation choices exist but choose optical technology for reinforced isolation

Engineers have several technology choices for providing isolation in a power generation system. For example, magnetic isolation devices couple signals across a thin insulating barrier through magnetic induction. In a high-voltage electric fault situation, this thinner insulation barrier breakdown may cause a short circuit that can be potentially hazardous to a user touching the controls or damage other components. Magnetic isolation is also susceptible to electromagnetic interference that could cause the system microcontrollers to malfunction.

Capacitive coupling is another means of providing isolation. Like magnetic coupling, capacitor-based isolation is susceptible to EMI.

Optical isolation based components—optocouplers, IGBT gate drivers, isolation amplifiers and intelligent power modules—have many advantages. Optical isolation does not need the high- and low-voltage lines to be physically close. This means that an optical device has greater distance through insulation, a virtual guarantee that a short cannot occur. Optocouplers provide superior EMI performance and can withstand much higher electromagnetic fields compared to all other isolators currently available in the market.

Avago Technologies' optocouplers are approved and recognized by component-level safety standards: UL1577, CSA and the IEC 60747-5-5withreinforced insulation. Magnetic or capacitive isolation technologies mighthave obtained certifications perthe obsolete IEC 60747-5-2 standard, which is already replaced by the new version IEC 60747-5-5, but neither of these two versions is applicable to the magnetic or capacitive based isolation devices.

EMI-immune communications with fiber optic technology
Wind and solar power generation installations often expand over a large physical area in remote land or sea locations. Reliability is very important as repair and even transportation to the site can be difficult or take a long time. Fiber optic data communicationlinks (Figure 2) with their inherent isolation, high data rate over long distances and EMI resistance are ideal for communication control and monitoring links. Fiber links are also used within a wind turbine nacelle for control and for communication between turbines and remote monitoring and control stations.

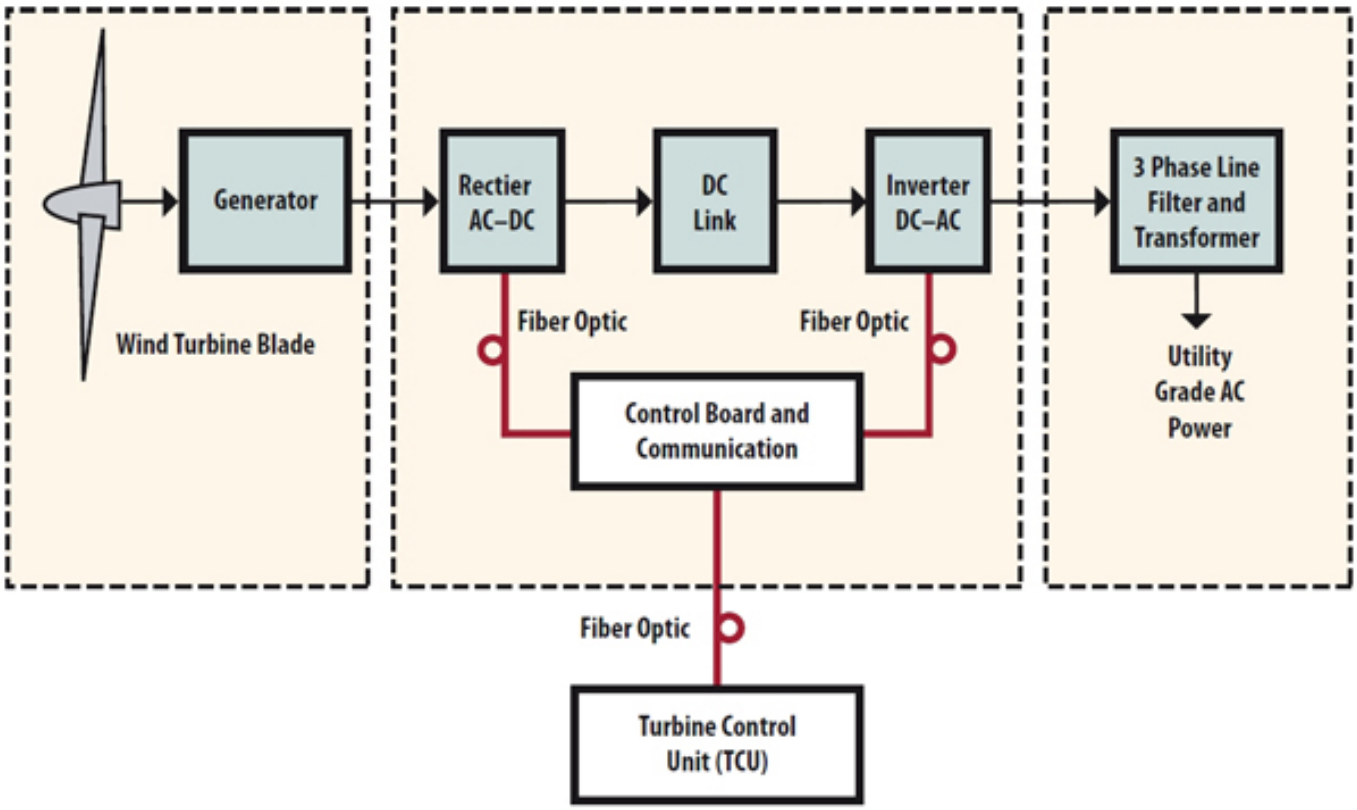

Figure 2. Fiber optics for local and wide area data links provide isolation and EMI immunity

Smart Grids: Optical isolation and fiber for wide-area communication

With developed countries facing aging electrical grids and emerging economies developing their power infrastructure, emphasis on new technology will cause the electrical grid to evolve towards smart grids and automation. These new power grids will include advanced High Voltage DC transmission and AC grid monitoring and control, as well as the ability to handle distributed alternative power generation that supplies varying power levels throughout the day. The automation to accommodate smart grid control and switching will make use of optical isolation technologies and long distance fiber communication data links.

Optoelectronic isolation-based components have an over 35 year proven performance track record of reliable operation in harsh industrial environments. Combined with fast optical communication technology, optical technology will help power renewable energy growth.

Source URL (retrieved on *12/13/2013 - 2:36am*):
http://www.ecnmag.com/articles/2012/04/renewable-energy-and-smart-grids-rely-optical-electronics-technology