Simplifying appliance design with capacitive touch sensing using SoC architectures

Robert Jania, Cypress Semiconductor Corp.

In small home appliances such as microwave ovens, coffer brewing systems, rice cookers and induction cookers, there has been a growing demand for capacitive sensing interfaces. These interfaces, typically buttons and sliders, can help differentiate a product, and may even allow the manufacture to sell it for a higher price, leading to more profit. Typically there are two microcontroller devices in these designs – one for the control task (heating the cooker) and the other for the capacitive sensing buttons or sliders. Ideally, all of these functions could be integrated onto a single chip, both to simplify design and reduce overall system cost. This article will look at the specific example of an induction cooker where the heat controller, capacitive sensing user interface and the user display have been integrated into one device.

An induction cooker is a modern electric cooker that uses electromagnetic induction principles to heat vessels. The induction cooker has a ceramic panel which is used as the cooking plane. An electrified coil under the plane produces alternating current which produces a magnetic field that creates heat in the cooking vessel (an iron or stainless steal pot). Inside the vessel, the magnetic field induces an electric current which creates heat. This heats the pot’s bottom quickly and then conducts the heat to the food.

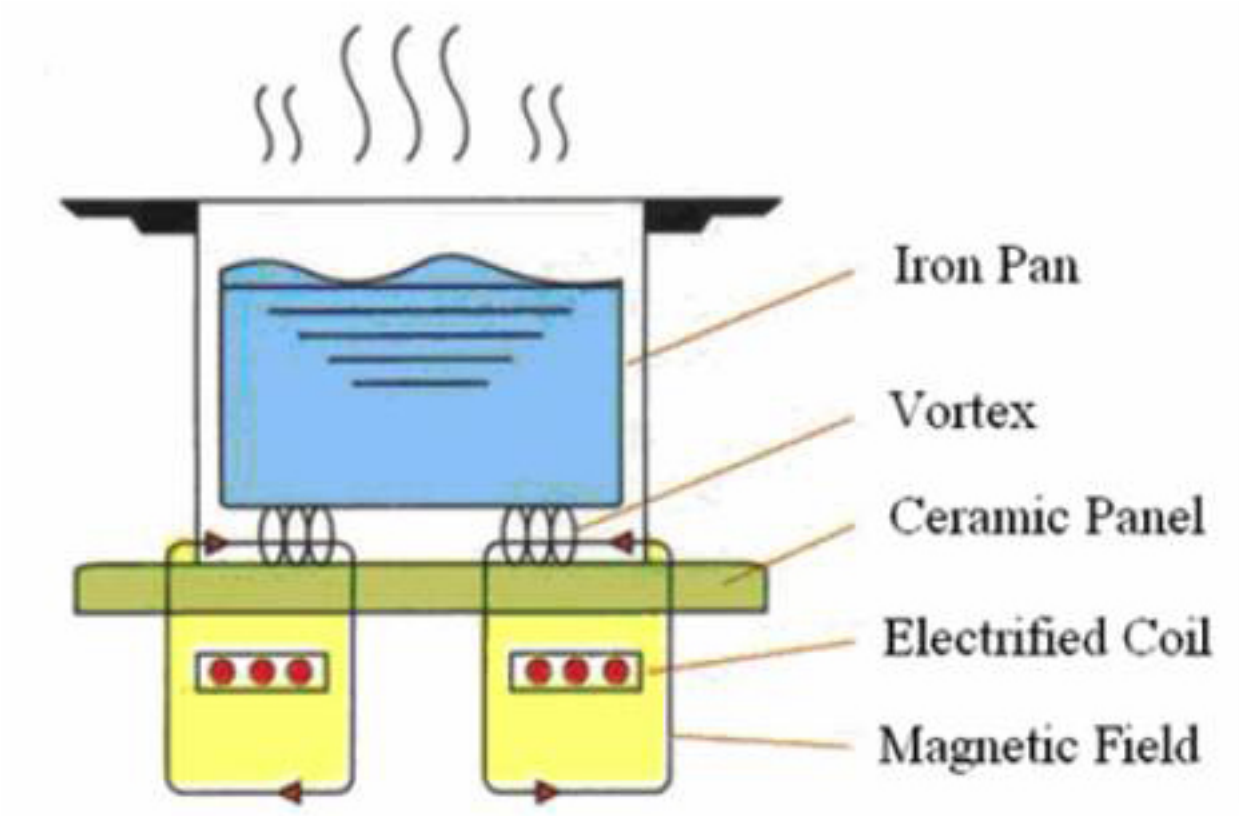

Figure 1. Induction Cooker

Looking deeper inside the cooker's working principles, we see that alternating current is converted into direct current by a rectifier. Next the direct current is converted into ultrasonic high-frequency alternating current by a high-frequency electric power conversion device. By connecting this high-frequency AC to the flat, hollow, helical heating coil, a high frequency alternating magnetic filed is generated. Under the ceramic panel, the electrified coil creates a magnetic field that breaks through the panel and induces a current in the bottom of the pot. This converts electric energy into heat energy, while overcoming the internal impedance stream. The generated joule heat is the heat source for cooking.

The major controls of the induction cooker include:
1) Insulated-Gate Bipolar Transistor (IGBT) Automatic Self Protection: The IGBT, which works under high voltage and high power conditions, can be destroyed by excess voltage, proliferated current, or excess temperature. Given the high cost of the IGBT and its strict operating parameters, it is necessary that a design protects the IGBT.
2) Temperature Control: Thermal sensors fixed in the ceramic panel bottom detect the temperature of the pot's bottom.
3) Power Control: The output power needs to be automatically regulated to compensate for any adjustments in the power supply and load.
4) User Interface Control: The cooker must be able to acknowledge the user's input from the capacitive sensing buttons or sliders and then display any relevant information back to the user via a LED display panel.

For an induction cooker, a mixed-signal programmable SoC like the PSoC 3 from

Cypress can be responsible for the entire system control, including current, voltage and temperature sampling, PWM generation for the MOSFET control, the induction cooker's power control, and the system display back to the user. In addition, the SoC has to be able to also integrate capacitive sensing. Capacitive sensing is a form of touch-based sensing that provides an alternative to traditional mechanical buttons and sliders. Instead of sensing the physical state of a button, capacitive sensors detect the presence or absence of a conductive object, like a human finger. Fundamental to any capacitive sensing solutions are groups of conductors that interact with their surrounding electric fields. The human body itself is full of conductive electrolytes, covered by a poor dielectric: skin. The fact that our bodies, or more specifically our fingers, are conductive is what enables capacitive sensing for human interfaces.

Figure 2 shows a cross section of a single capacitive sensing button. Whenever two conductive elements are within close proximity to each other, a capacitance is created, noted as CP in this diagram, which is generated by coupling the sensor pad and ground plan. CP is the parasitic capacitance and is typically on the order of 10 pF to 3000 pF. The proximity of the sensor and ground planes also creates a fringe electric field that passes through the overlay. Since the tissue of the human body is basically a conductor, placing a finger near fringing electric fields adds conductive surface area to the capacitive system.

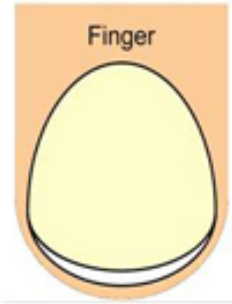

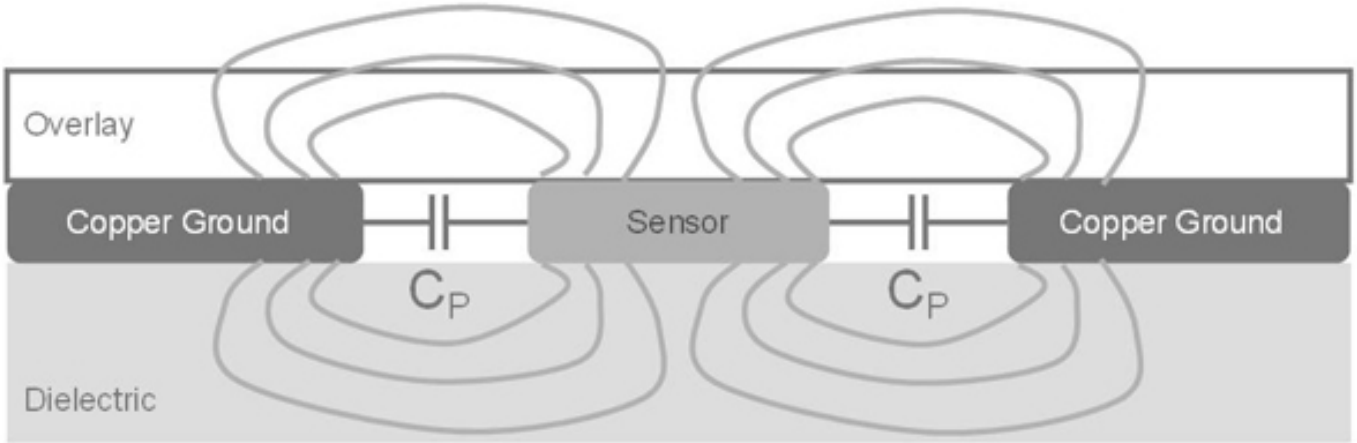

* Diagram not to scale

Figure 2. Cross-Sectional View of a Capacitive Sensor

This additional capacitance from the finger, noted in Figure 3 as CF, is on the order

of 0.1 pF to 10 pF. Although the presence of a finger induces change, the scale of the change in comparison to the parasitic capacitance is quite small. Capacitive sensing is the process of observing this change.

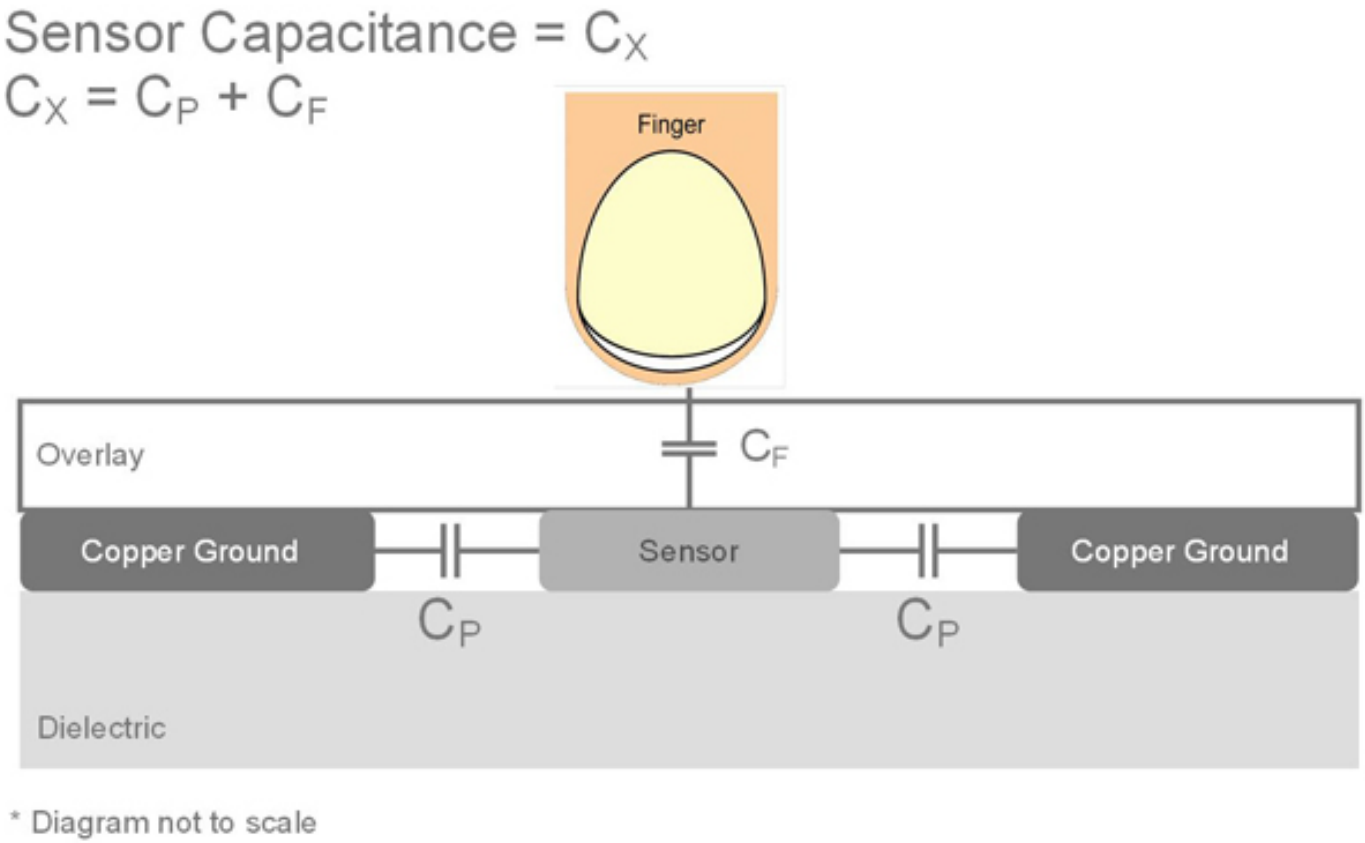

Figure 3. Summation of Capacitances

Let’s call the sensor’s measured capacitance CX. With no finger present, CX is equal to CP. When a finger is present, CX is a combination of CF and CP.

Mixed-signal SoCs like PSoC 3 can do more than just monitor capacitive sensors. Analog and digital resources are available for a myriad of other applications. Basic digital control can be configured to drive LEDs, control a PWM, and communicate through a variety of protocols (I2C, I2S, SPI, UART, etc.). Analog capabilities include inputs, outputs, signal conditioning and control. All of this together enables a single-chip induction cooker.

The system firmware completes this design. Now the system functions includes the user interface control, such as CapSense buttons and a LED display. It also includes analog signal sampling and an internal timer. In addition, the control algorithm implements the fixed temperature control, stable power control, and the induction cooker’s kernel functions. Figure 4 shows the high-level flowchart of the firmware.

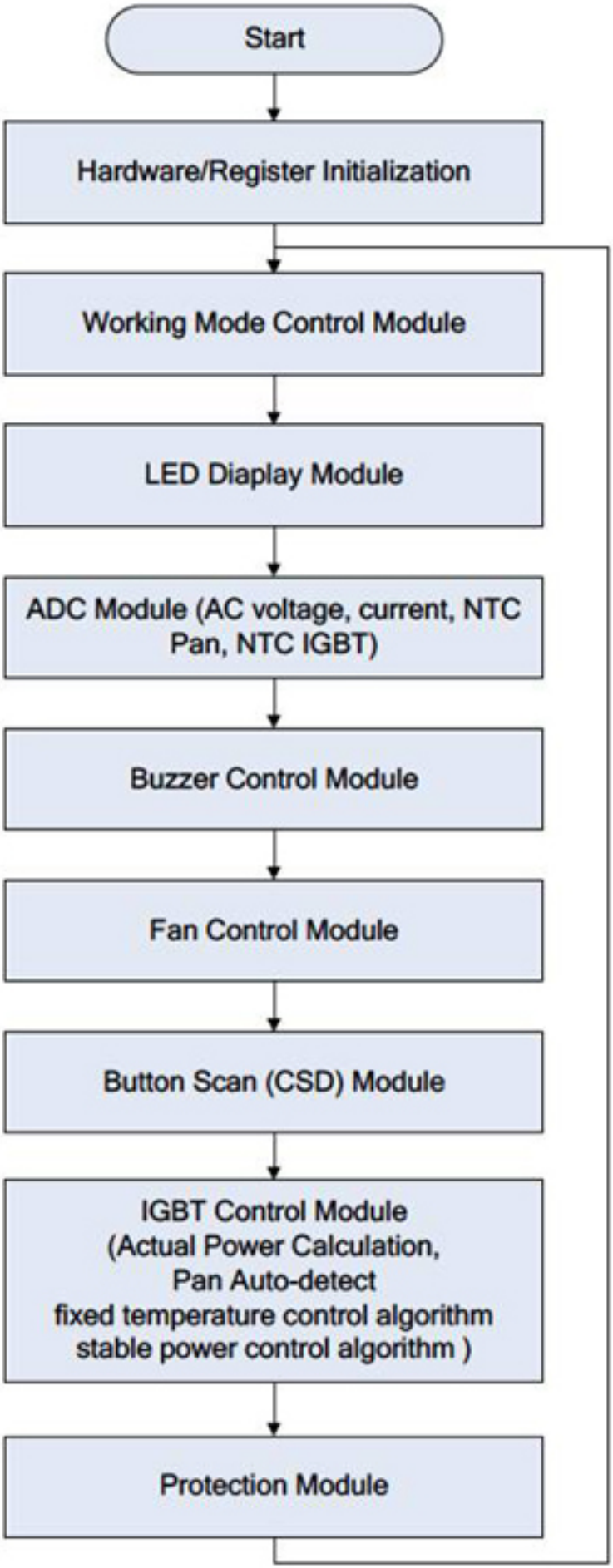

Figure 4. Flowchart of Firmware

With the use of programmable mixed-signal SoC devices like the PSoC 3, all of the functions of an induction cooker can be integrated into one chip. With few discrete components and an optimized algorithm, this design incorporates all of the kernel functions of the cooker, CapSense buttons, stable power close loop control, and fixed temperature close loop control.

Source URL (retrieved on *09/21/2014 - 7:04pm*):
http://www.ecnmag.com/articles/2012/03/simplifying-appliance-design-capacitive-touch-sensing-using-soc-architectures?qt-recent_content=0&qt-video_of_the_day=0