RC analog-to-digital converters simplify design of temperature, humidity, & CO instrumentation

Alec Melnick, Sr. Applications Engineer, Lapis Semiconductor

Temperature, humidity and other physical measurements in digital instrumentation typically utilize successive approximation (SA) analog-to-digital conversion (ADC) techniques to acquire data. While providing accurate, high-resolution results, SA ADCs increase component count and power consumption. This article will describe use of resistor-capacitor (RC) ADCs to reduce component count and further reduce power consumption in a range of battery-operated applications. Highly integrated RC–ADCs in Low Power Microcontrollers provide the key to implementation in these types of applications.

Temperature/humidity/CO sensors

Temperature, humidity, or CO measurements can be made by measuring the value of a discrete component that has a predictable value at given environmental conditions. These components can be monitored in a variety of ways including a bridge circuit, a simple voltage divider, or electrically determining how the variable value component affects a circuit. A typical way to do this is to use an RC circuit.

Each of these methods has its advantages and disadvantages. One of the typical challenges to making these measurements is precise control over excitation circuits, either current, voltage, or frequency. Accurate measuring circuits and coordination of the resources associated with making measurements are also challenging. RC measurements in particular require the coordination of many discrete functions such as counters, stimulus circuits, and calibration. The ideal solution would be self-calibrating, highly integrated, and provide repeatable performance over the entire operating voltage and temperature ranges of the product.

Resistor-capacitor (RC) analog-to-digital conversion

A method to easily measure environmental characteristic with a discrete component is to use a variable resistance device. For example, RTDs have a well-defined resistance-temperature curve. Figure 1 shows a typical “Resistance vs. Temperature” curve for an RTD. There are similar devices that have well-defined variable resistive values over humidity and various gas concentrations that would be used to measure and monitor those environmental conditions.

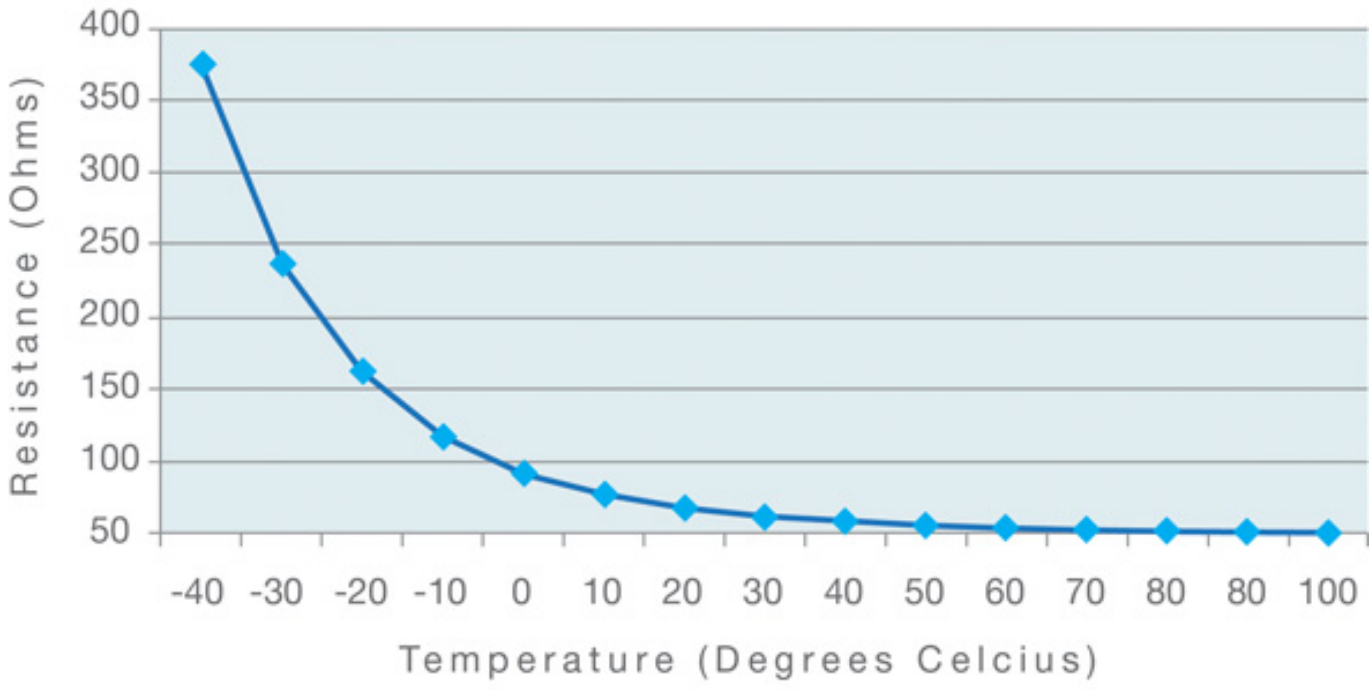

Figure 1. Resistance vs. Temperature Curves for a typical NTC (Negative Temperature Coefficient) RTD

The analog-to-digital conversion is carried out by measuring the time-constant of the RC circuit. A simple counter is used and the count is then compared to a look-up table that correlates the count to the temperature. This technique, while simple to describe, can require a great deal of discrete circuitry to execute unless a low power microcontroller is used to perform the process.

Low-power microcontroller implementation

The major functional blocks required by an RC-ADC are two counters, one driven by an internal fixed frequency clock, typically a crystal oscillator, and one counter driven by a variable frequency which is controlled by the RC loading on specific pins of the device. The fixed frequency counter defines a time base which is used to measure the frequency of the variable frequency clock. The advantage of using this type of integrated ADC is that it can usea known value component to calibrate the circuit and then use the variable value component to make the measurement.

Figure 2 shows a block diagram of how a microcontroller-based RC-ADCinterfaces with external components. The external component count is minimal and the types of components required are passive and small. In this example, the Lapis Semiconductor ML610400 Low-Power Microcontroller is used. The typical range for CS is 700 to 1000 pF. The power consumed while using the RC-ADC is normally no more than 0.90 mW(0.30 mA at 3.0V Vdd) and a calibrated measurement takes less than 2 seconds.

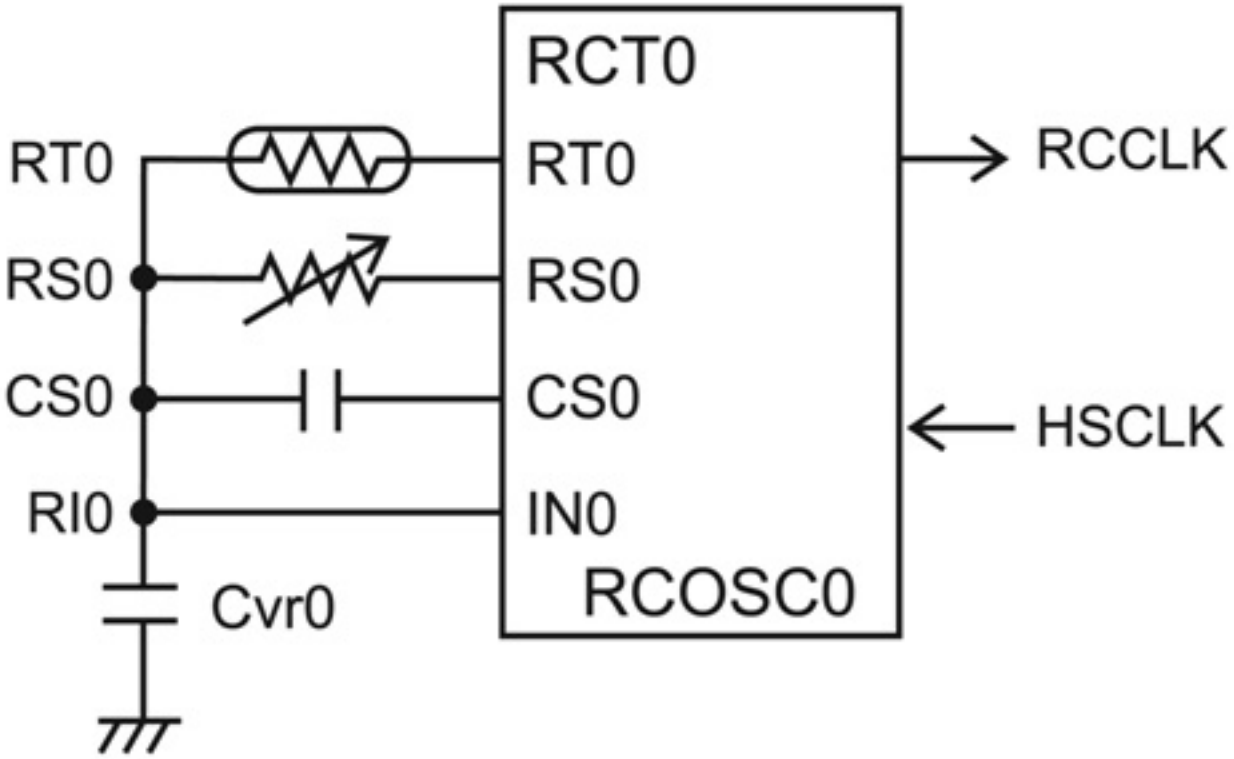

Figure 2. External Circuit for RC-ADC consists of Reference Resistor (RS0), Capacitor (CS0) and Variable Resistance Sensor (RT0).

Capacitor CS0 is discharged and then is charged by passing a load-sensitive oscillating signal through RS0, a fixed value resistor. The product of the values of the resistance and capacitance affects the rate at which the signal oscillates. The fixed rate counter defines the time base and after a fixed period of time the number of variable frequency clock cycles is recorded, Time Ref. The ADC then discharges CS0 and charges it with the same oscillating signal through the variable value componentRT0. After the same amount of time as the first measurement, the number of clock cycles is recorded as Time Variable. A temperature, humidity or CO concentration sensitive device could easily be used as RT0 to make the associated measurement.

Since the frequency of the charging signal is a function of the product of the resistors and CS0, the exact value of CS0 and other inconsistencies inherent in the devices, defined as K, factors out of the equation:

$$K * CS0 * RS0 = Time\ Ref \rightarrow RS0 = \frac{Time\ Ref}{(K * CS0)}$$

$$K * CS0 * RT0 = Time\ Variable \rightarrow RT0 = \frac{Time\ Variable}{(K * CS0)}$$

$$\frac{RT0}{RS0} = \frac{(Time\ Variable\ /\ \cancel{(K * CS0)})}{(Time\ Ref\ /\ \cancel{(K * CS0)})} = \frac{Time\ Variable}{Time\ Ref}$$

$$\frac{RT0}{RS0} = \frac{Time\ Variable}{Time\ Ref}$$

$$RT0 = \frac{Time\ Variable * RS0}{Time\ Ref}$$

The ratio of the amount of time it takes to charge through RT0 compared to RS0 (Time Variable:Time Ref) is the ratio of the values of RT0 to RS0, and since RS0 is a known value, and Time Variable and Time Ref are determined, RT0 can be calculated or determined by the use of a look up table.

As such, the temperature at RT0 is known because the value of RT0 is determined. Using this method the variability of the value of the capacitorCS0, differences between devices, or variations due to the voltage applied to the device are taken out of the equation. In other words, this self-calibrating method takes out component and process variability. Implementing an RC-ADC of this type provides the ability to design monitoring products with relatively high precision and accuracy.

This article is adapted from a white paper entitled, “Low Power Microcontrollers for Temperature, Humidity and Carbon Monoxide Instrumentation,” available for download at http://www.rohm.com/us/low-power-micro.html [1]

Source URL (retrieved on *04/28/2015 - 3:48pm*):
http://www.ecnmag.com/articles/2012/03/rc-analog-digital-converters-simplify-design-temperature-humidity-co-instrumentation

Links:
[1] http://www.rohm.com/us/low-power-micro.html