Modular, functionally versatile, and economical TPMS systems

Ivan Zagan, Product Line Manager, Melexis

Today, feature-rich automobile electronic systems manage safety and control functions. Airbags, antilock brakes, tire pressure monitoring systems (TPMSes), navigation and infotainment features are governed by burgeoning numbers of microcontrollers (MCUs). Luxury vehicles may include >50 MCUs. To counter the increased costs associated with multiple MCUs, manufacturers can integrate processing functions and sensors with multicore functionality.

Modular TPMS: Affordable options

For example in addition to providing a safety benefit, TPMSes also help drivers maintain correct pressures, increase fuel efficiency, and reduce emissions. There are two basic types of TPMS systems. The first simple, low-level system, consists of a pressure sensor and a transmitter IC in each wheel that sends pressure data to a central receiver. Low pressure reads illuminate a warning light in the driver's instrument cluster without indicating which tire is under-inflated. The second, high-end TPMS indicates the individual, problematic wheel—but requires more sensors in each wheel.

By integrating the sensors and transmitter into a single modular unit system, the TPMS IC can be connected to one or any number of required sensors, offering flexibility without unnecessarily adding expense. The RF transmitter IC also can be replaced to accommodate in response to required system frequency changes.

To protect TPMS systems from their harsh environments, Melexis TPMS sensor and transmitter IC components are qualified to AEQ-100 standard, mounted in a robust dedicated package, and tested to verify functionality under high shock, vibration loads, and exposure to heat, solvents, and other media.

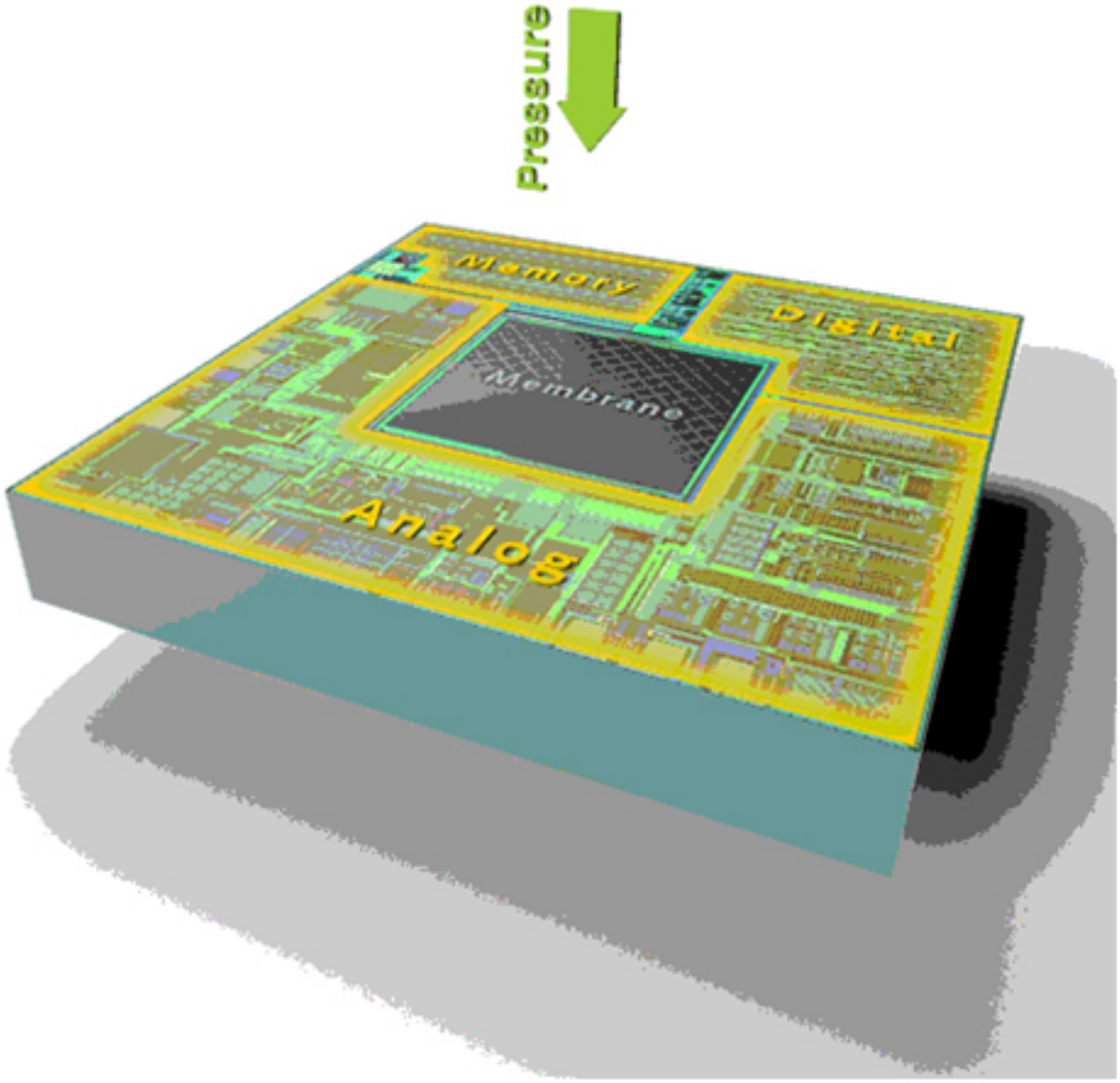

A tire pressure sensor is directly exposed to the atmosphere which may contain solvents inside the tire.

Real world TPMS

Melexis' modular-approach to TPMS, combines its MLX91801 analog pressure sensor with a sensor interface micro-controller and a MLX72013 RF transmitter. This TPMS module can be used in pair with the MLX71122 multi-channel RF receiver providing a complete TPMS system, compliant with remote keyless entry (RKE) systems. Adding an external roll sensor and peripheral passive support components yields a complete, cost effective, TPMS system.

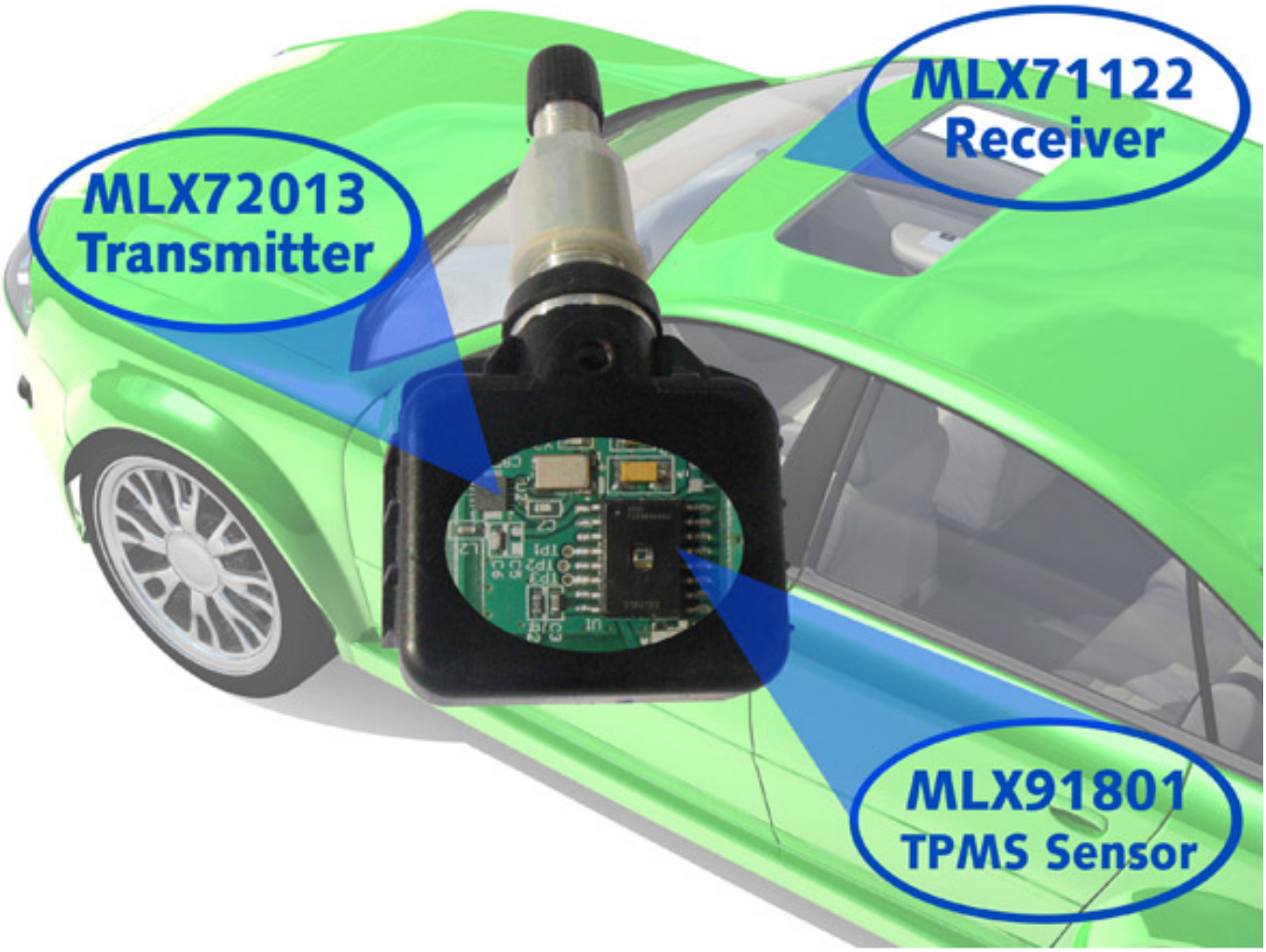

The MLX91801 contains blocks for control of the sensor interface, communication interface, and power management blocks supporting very low power consumption in standby mode. The device measures pressure, temperature, and supply voltage. The pressure sensing element is a MEMS-based absolute resistive-bridge pressure sensor. The communication interface provides commands for receiving and sending data to the host system. A standard software library with low-level routines gives access to all the IC's functions. The pressure sensor block provides 1% full-scale accuracy with a default pressure range of 100 – 800 kPa, though other ranges are available. Application Examples offer an introduction to the Melexis microcontroller programming and facilitate eased customization.

The MLX72013 ASK/FSK (amplitude shift keying/frequency shift keying) transmitter IC is designed for applications in the license-free 433 MHz ISM (Industrial-Scientific-Medical) band air interface for wireless communications (433 MHz is available for use worldwide and meets the EN 300 220 telecommunications standard.

The MLX71122 multi-channel receiver IC is based on a double-conversion super-heterodyne architecture. It receives FSK and ASK modulated RF signals either in eight predefined frequency channels or is frequency programmable via a 3-wire serial programming interface (SPI). Its highly linear RSSI (Received Signal Strength Indication) provides automatic wheel identification.
With the trend for fully integrated automotive TPMS solutions, this modular

approach provides extended capabilities and flexibility at a significant cost advantage.

Design examples

Figure 1 below shows an application example of the modular solution available with MLX91801 and a Melexis RF Transmitter IC, MLX72013.

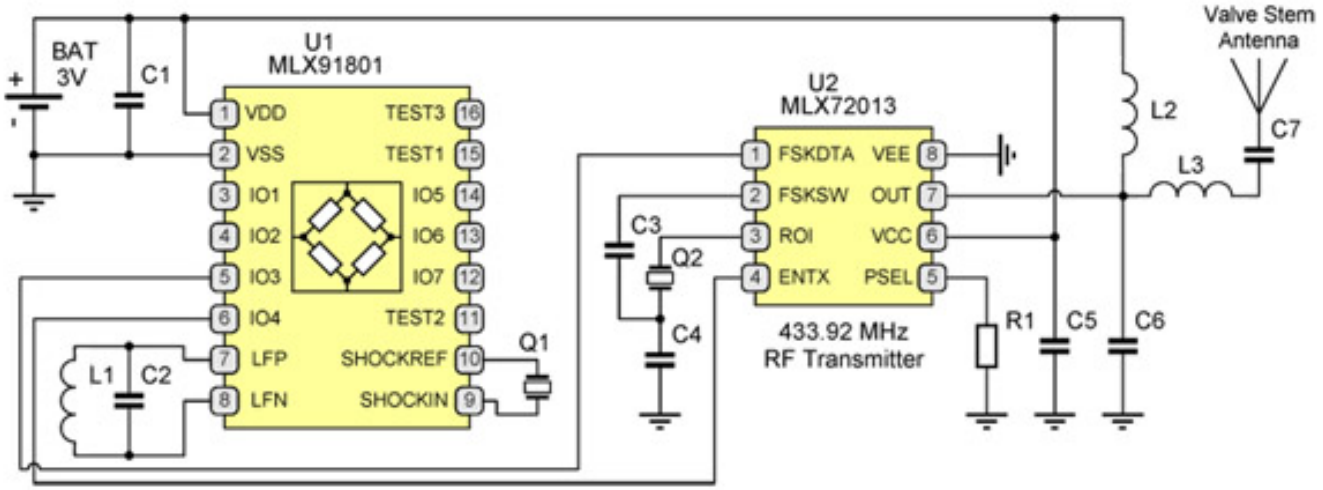

Figure 1. Schematic example of the tire pressure sensor based on the MLX91801

Figure 2 below illustrates a block diagram of the Melexis TPMS solution demo kit that is now available. This demo board uses the MLX91801 TPMS sensor, the MLX72013 RF Transmitter IC and the MLX71122 RF Receiver IC. The kit comes with an LF/RF transceiver and antenna, with USB connection to a computer and read out software.

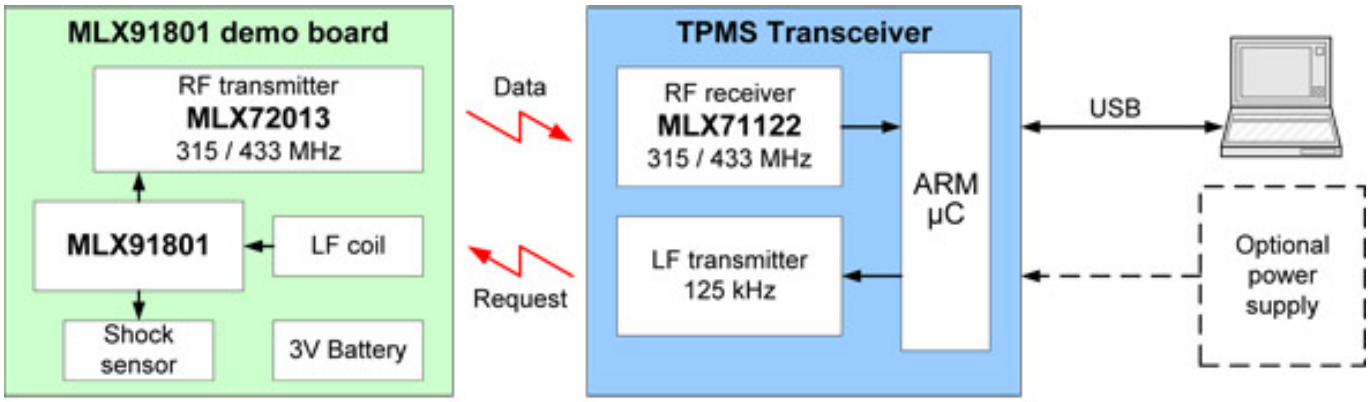

Figure 2. DK91801 block diagram

Source URL (retrieved on *12/20/2013 - 7:09am*):
http://www.ecnmag.com/articles/2012/03/modular-functionally-versatile-and-economical-tpms-systems?qt-most_popular=0&qt-video_of_the_day=0