Reference Circuits Address Practical Circuit Design Challenges

With the industrial and instrumentation market becoming more competitive, circuit designers continually face new challenges to design products faster, with fewer iterations, and incorporating a wider range of mixed-signal technologies including analog, digital, power, and RF. In addressing these challenges, reference circuits, such as Circuits from the Lab from Analog Devices, provide application designers with built and verified circuit solutions that can be integrated into a system design, anticipating and directly addressing challenges in producing a complete solution with minimum time to market.

Layout Considerations for High Channel Count, Simultaneously Sampling, High Performance Data Acquisition Systems.

A breadth of application areas, varying from instrumentation to medical, requires simultaneous sampling of large numbers of high performance analog signals. In high channel count systems, the layout of multiple ICs and decoupling components—and the routing of supplies, sensitive analog signals, and high speed digital control lines—can be very challenging. For example, analog-to-digital data acquisition systems (DAS), such as the AD7606 DAS, are designed for power line monitoring and relay protection applications where design and layout engineers face such layout challenges. DAS analog-to-digital converters (ADCs) simplify the bill of material requirements for high channel count systems, especially if they offer eight-channel, simultaneously sampled, 16-bit ADC with integrated bipolar input signal conditioning, input over-voltage protection circuitry, anti-aliasing filtering, high performance ADC, reference, and ref buffer circuitry. For a system designer a reference circuit, such as ADI'sCN-0148 note [1], addresses the layout and routing challenges associated with using multiple DAS devices in a high channel count application.

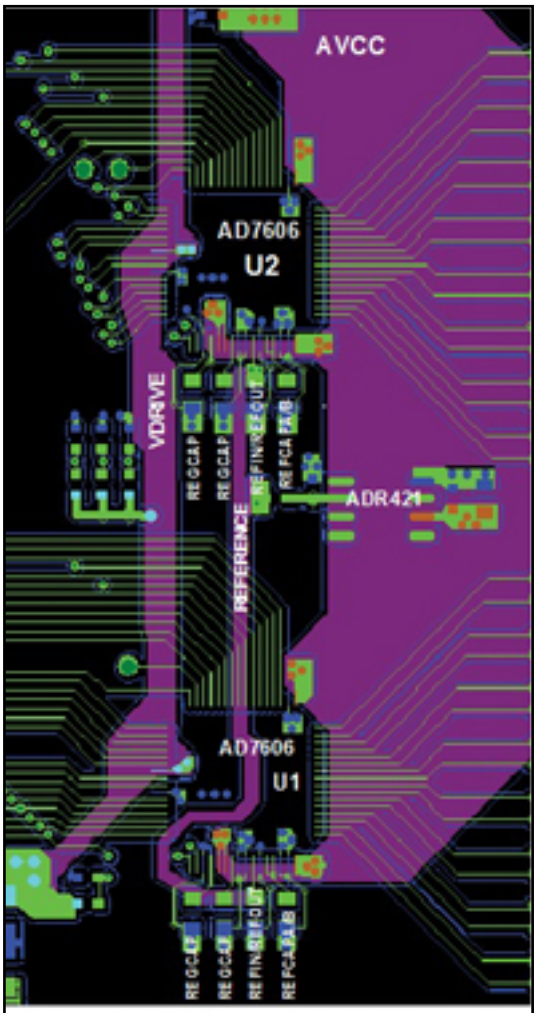

Figure 1. PCB layout for 16-channel DAS using two DAS devices.

For the designer, a reference circuit layout that is optimized for channel-to-channel matching and part-to-part matching , will help reduce the complexity of calibration routines in high channel count systems. The reference circuit highlights for designers the need for symmetrical layout around the analog input channels, and device decoupling for good channel-to-channel matching and part-to-part matching. It also identifies the critical decoupling capacitors for individual DAS devices, reference, and reference buffer, and highlights the placement of these capacitors relative to the IC. The circuit note discusses the location of the common external reference chip to further aid with part-to-part matching.

Precision Instrumentation for Test and Measurement

As the accuracy requirements of precision instrumentation — and test and measurement applications — increase, more accurate components are being developed to meet these needs. A digital to analog converter (DAC), such as ADI's 20-bit AD5791 DAC, is an example of such a high end precision component. DACs offer designers accuracy specifications up to the 1-ppm level without further user calibration. However, designers often require careful component selection, and layout techniques must be considered when designing circuitry for this level of precision.

Even though precision 1-ppm components, such as the AD5791, are on the market, building a 1-ppm system is not a task to be taken lightly. Error sources that show up at this level of precision must be carefully considered. The major contributors to errors in 1-ppm-accurate circuits are noise, temperature drift, thermoelectric voltages, and physical stress. Precision circuit construction techniques should be followed to minimize the coupling and propagation of these errors throughout the circuit and the introduction of external interference.

High-frequency noise can be eliminated relatively easily with simple R-C filters, but low-frequency 1/f noise in the 0.1-Hz to 10-Hz range cannot be easily filtered without affecting DC accuracy. The most effective method of minimizing 1/f noise is to ensure that it is never introduced into the circuit. Using a reference circuit, such as CN-0191 from ADI's Circuits from the Lab, helps designers detail the key advantages in selecting high precision low noise amplifiers for buffering the reference and the DAC output. The amplifiers selected in circuit note enable the designer to ensure that the 1/f noise introduced will not dominate the signal chain's noise budget.

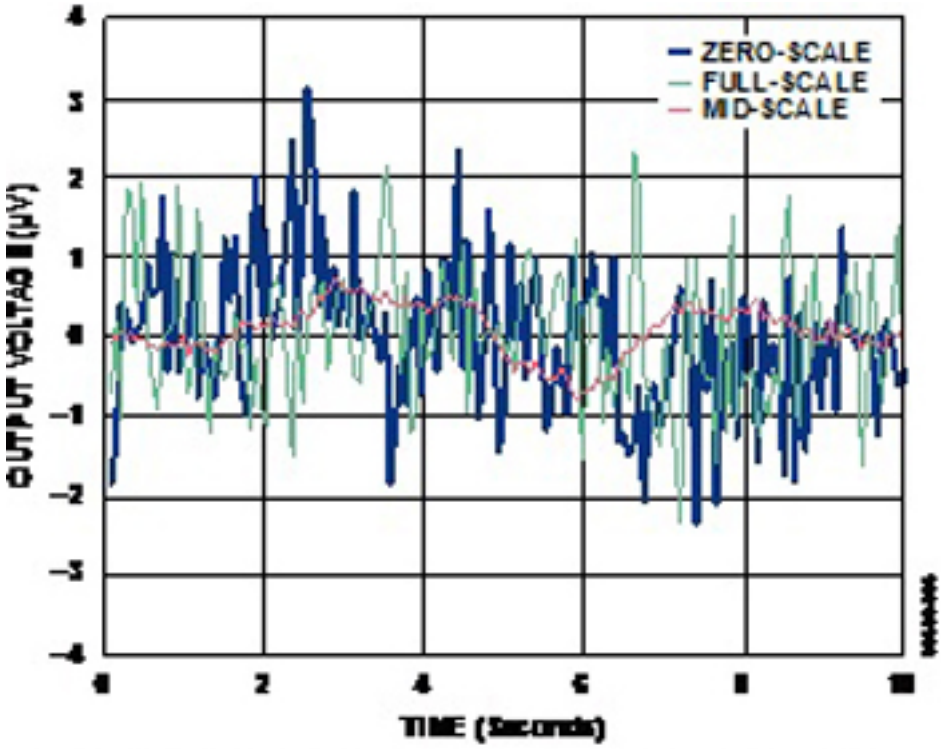

Figure 2. Voltage noise in 0.1 Hz to 10 Hz as documented in CN-0191.

Components in the reference circuit are selected to achieve optimal system performance. Careful layout techniques are followed and documented in PDF and Gerber files to assist the customer in achieving the expected 20-bit performance. The reference circuit note will often detail system evaluation board and software that have been developed to replicate the specified datasheet performance of the parts. Figure 2 outlines the noise performance achievable when following the guidelines outlined in CN-0191.

Fully Programmable Universal Analog Front End for Process Control Applications

The circuit shown in Figure 3 provides a fully programmable universal analog front end (AFE) for process control applications. Today, many analog input modules use wire links (jumpers) to configure the customer input requirements. This requires time, knowledge, and manual intervention to configure and reconfigure the analog input channels. The value proposition provided by this solution is that it replaces the manual configuration with a fully software configurable solution that provides industry leading performance and cost savings to the end user.

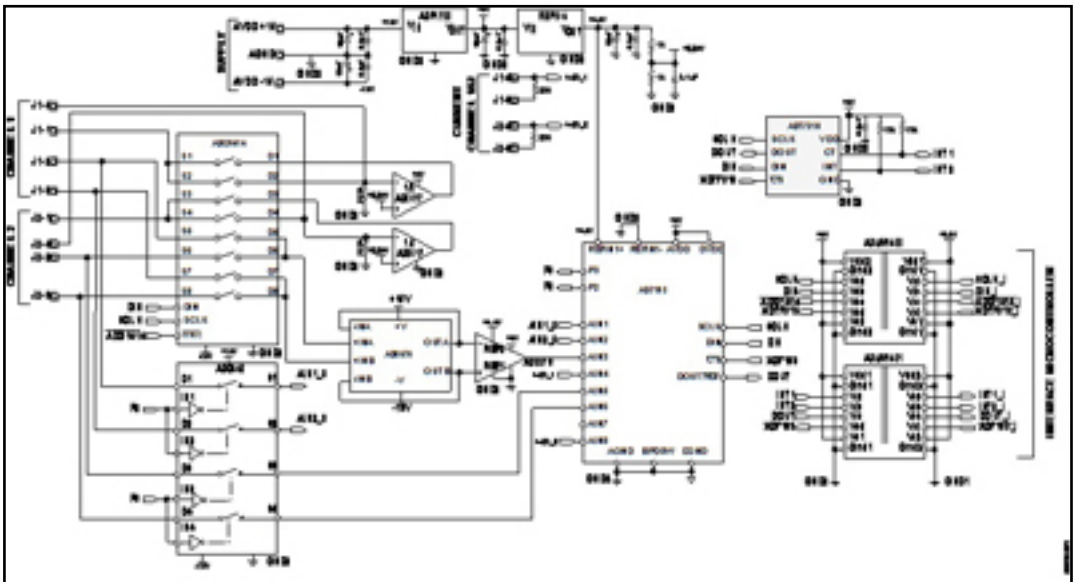

Figure 3. Simplified schematic for a fully programmable universal analog front end for process control applications.

For example, a reference circuit, such as CN0209 offers engineers with a way to supports: 2-, 3-, and 4-wire RTD configurations, thermocouple inputs with cold junction compensation, unipolar and bipolar input voltages, and 4 mA-to-20 mA inputs into their design. By providing details on the the software controllable switch, designers can configure the correct modes along with a constant current source to excite the RTD. A reference note also serves to highlight how to set reconfigurable common-mode voltages for the thermocouple. In Figure 3, a differential amplifier is used to condition the analog input voltage range to the sigma-delta ADC. A reference note offers the engineer details on how to include standard external protection for meeting IEC 61000 compliance specifications.

Designed for fast and easy system integration, reference circuits can help engineers save weeks of research and design time by detailing easy-to-understand, building blocks engineered and tested for quick system integration. Reference circuits enable application engineers to identify the circuit design challenges -- before implementation. Many reference circuit notes package performance data, schematics, layout files, and bill of materials into a complete instruction kit. In addition, reference circuits, such as ADI’s Circuit from the Labs, make available evaluation software and an evaluation board for additional testing. As a result, designers can create reliable, repeatable circuit performance in common and complex design challenges in analog, RF and mixed-signal systems.

About the authors:

Albert O'Grady is a senior staff applications engineer for the Industrial and Instrumentation Segment, at Analog Devices, Inc. He is responsible for system applications development in the Building Technology sub-segment. He holds a BEng degree in Electronic Engineering from University Of Limerick. He can be reached via email at albert.ogrady@analog.com [2].

Liam Riordan is an applications engineer at Analog Devices. He joined Analog Devices in 2004 and works in the Precision Converters Applications Group in Limerick, Ireland. He is responsible for applications support of the precision and bipolar DAC family. He graduated with a BEng in Electronic Engineering from University College, Cork. He can be reached at liam.riordan@analog.com [3].

Claire Croke is an applications engineer at Analog Devices, Inc. She joined Analog Devices in 1999 and works in the Precision Converters Applications Group in Limerick, Ireland. She is responsible for applications support for precision ADCs. She graduated with a BEng in Electronic Engineering from the University of Limerick, Ireland. She can be reached at claire.croke@analog.com [4].

Source URL (retrieved on *07/12/2014 - 8:54am*):
http://www.ecnmag.com/articles/2011/10/reference-circuits-address-practical-circuit-design-challenges?qt-recent_content=0

Links:
[1] http://www.analog.com/en/circuits-from-the-lab/cn0148/vc.html
[2] mailto:albert.ogrady@analog.com
[3] mailto:liam.riordan@analog.com
[4] mailto:claire.croke@analog.com