Simplifying Total Energy Management

Alan Elbanhawy, Akros Silicon

In past years, energy management in electronics equipment has moved from being a “check-box” requirement to a real competitive feature and differentiator. Traditional DC-DC point solutions that optimize single parameter via fine tuning of components are just not sufficient and practical for managing system energy consumption under real-time operating conditions. A new approach of dynamic monitoring and on the fly control of system level parameters is essential to optimize system level energy usage.

What is Total Energy Management?
Typically, power management in electronic designs focuses on the efficiency of power conversion. In contrast, Total Energy Management(TEM) is an approach that not only provides high-efficiency power conversion ICsit also focuses on total system efficiency. The objective is to dynamically control the power by monitoring the environment, resulting in truly efficient system designs, not just of power sub-conversion.

Energy management IC solutions exceed the traditional boundaries of power management ICs by combining several technologies into the design.

Traditionally, semiconductor companies provide a single block component IC (“bag of chips” approach) that has been optimized to the maximum for one or two specific parameters. This was ansignificantinvention; however, it leaves the daunting task of making that IC work within the system up to the system designer. Today, the system designer must find a way to make this bag of chips – comprising components by different vendors, designed at different times – work together. This is no longer sufficient. Total Energy Management requires attention to the dynamic details of the system to affect optimum energy usage.

Implementation of Total Energy Management (TEM) requires features such as:
• Real time energy usage monitoring – like input power measurements, power system health monitoring
• High Efficiency conversion – including light load management, ultra-low standby and sleep modes; flexible sequencing control to optimize multiple-rail output power start-up
• Fast system dynamic response –ability to rapidly change operating mode of the

device from Continuous to Discontinuous modes, manage standby and sleep time requirements
• Digital power control – like voltage margining to manage power consumption under differing performance requirements
• High-efficiency EMI control and mitigation

Implementing such features using bag of chips approach is impractical, if not impossible. Moreover, most modern electronics are built around complex system-on-chip (SoC) solutions in deep-submicron lithography, requiring a wide range of disparate power rails to be available. A typical system may have 5-6 different rails, all separate, and sometimes even multiple for SoC core, I/Os, memory, analog interfaces and communication/RF interfaces. These SoCs force a very specific startup and enabling/disabling constraints on the power supplies for structural design reasons. Building energy efficient systems around these SoCs require the power subsystem to have similar SoC approach – for design flexibility, intelligent and uniform control across all power rails. The right approach is to integrate these essential energy management features into multi-rail power management device in a SoC like fashion.

An example of the Total Energy Management, or TEM,approach is Akros Silicon’s new Energy$enseAS19xx family of high efficiency DC-DC converters. Each digital power management unit (DPMU) integrates multiple features into each device (Figure 1).The product family comprises 10 products with five different power manager topologies. All are pin and PCB compatible and come in either hardware or software (I2C interface) versions. Each has three or two outputs as a combination of two fully integrated synchronous DC-DC converters and one versatile controller configurable as buck, boost or LED drive.

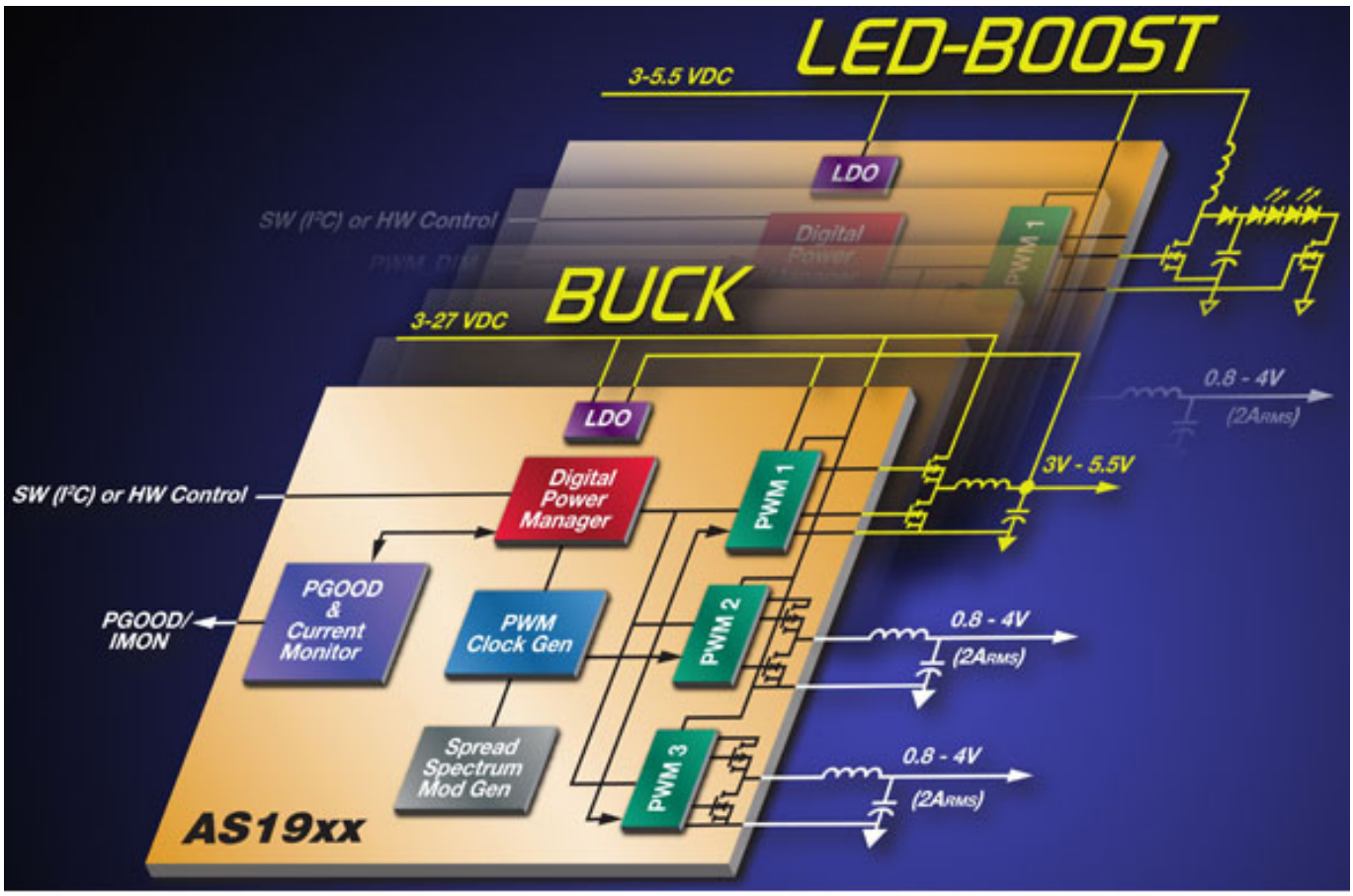

Figure 1: Pin and software (I2C) compatible DC/DC converters in the AS19xx family offer real-time, TotalEnergy Management (TEM).

Total Energy Management is applicable to a wide range of applications, including4G LTE residential gateways and femtocells to tablets and large display-oriented consumer devices, ultra-books, e-books, digital photo frames, NAS and media hubs, Internet-TV and IPTV set-top boxes, automotive infotainment systems, solid-state lighting, and communication equipment with cluster-power or intermediate bus architectures, as well as many other applications.

Conclusion

The insatiable appetite for power and multiple rails in modern electronics is only matched by the need for high performance and advanced operational and control features that confronts power system designers. Their major challenge is to achieve all the design requirements with an implementation that has the highest efficiency (?95%), occupies the smallest possible PCB real estate and at a cost sometimes bordering on the impossible.Developed using a Total Energy Management approach, the AS19xx solutionmeets the designer's energy management needs without adding complication, space and cost— all while providing real-time power monitoring and adding energy management features that increase efficiency.

Source URL (retrieved on *04/26/2015 - 1:27am*):
http://www.ecnmag.com/articles/2011/09/simplifying-total-energy-management?qt-most_popular=0