# EMI Shielding: Connector and Passive Component Technology Impacts

Ron Demcko, AVX Fellow

It is hard to recall of the time where EMI shield coatings and seal gaskets were not available, but those times existed not so long ago. EMI shielding has evolved in many respects through the years and will likely have an increased and expanding role in future of high performance electronics. As much as the material and features/options for solutions have improved, designers are still evaluated on the same parameters – how effective is the shielding solution relative to its cost, ease of implementation, weight and size? It is appropriate to point out a few relatively new options for designers to consider as they go through the EMI shield specification / solution process.

**Re-workable metal shield enclosures**:

Metal shield can covers are an effective solution in EMI control, however are not easy to remove once soldered in place. The utilization of metal shield clip connectors will allow a shield clip to become removable and thus allow multiple access cycles to rework internal electronics. Metal shield clips connectors are made of machine formed copper with aSn finish. They are supplied in embossed plastic tape for automatic pick & place on PCBs. These devices act to anchor the EMI shield covers to the PCB.

Shield clips provide a perfect option for units requiring EMI shielding which needs to be removed during the end systems lifetime for recalibration &upgrade assembly. Performance is dependent upon frequency of use and shield clip spacing on the PCB. Shield clips are somewhat of a compromise since a continuous solder joint can not occur around the cans base. In some cases, shield clips can offer similar performance and lowered assembly costs. They are worth adding to the decision tree when considering shield can options.

An example of a shield clip prior to PCB mounting is shown is shown in figure 1a. An example of the metal shield wall mating to the shield clip is shown in figure 1b.The most common shield clip dimensions are 5mm x 2mm x3mm and 5.5mm x 2.2mm x 1.8 mm.

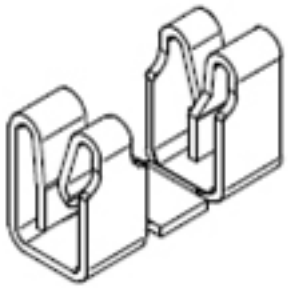

Shield clip connector
Figure 1a

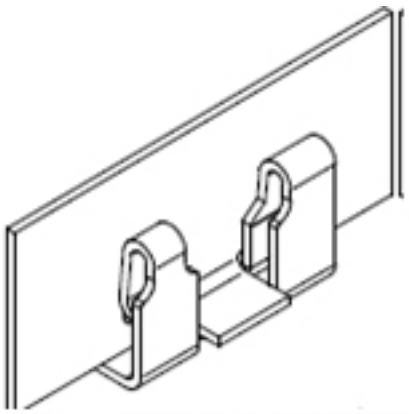

Shield can wall mated to shield clip
Figure 1b

**The Input Output problem**
One of the potential problems designers have to deal with is how to get power and signals routed from inside a metal shield can to the outside world without destroying shield integrity. On larger shield box assemblies, solder-in and bolt-in FeedThru filters are commonly employed.

These devices are available in C, LC, T and PI configurations in leaded cylinder cans in the 0.100’ diameter range. However, leaded cylindrical FeedThrus are not ideal for miniature EMI shield can I/O. Miniature SMT FeedThru filters can be a more effective solution.

**FeedThru Description**
FeedThru filters are a three terminal devices available in single element of 4 element array packages as shown in the figure 2a and 2b.

4 element LC T array Filter

Figure 2a

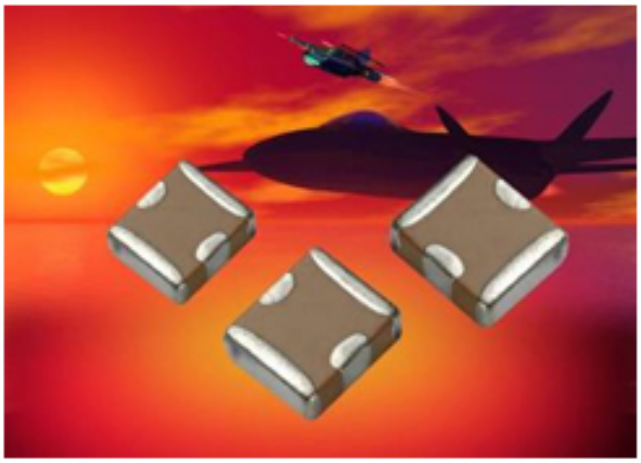

Single element LC T Filter

Figure 2b

FeedThrus have an input and output and two center tap ground terminals midway along the body. They are many times called an LC T filter though the series

inductance is achieved through non ferrous materials. They are most commonly made out of ceramic dielectrics and ZnO varistors materials with termination options that are either RoHs or SnPb for use in commercial and military/SCD applications.

Multilayer FeedThru varistors offer designers various EMI filter responses as well as sub-ns turn-on time, bi-directional transient voltage suppression. Recently, a version of PI-configured varistor arrays were developed to provide significant advantages in EMC control in a variety of I/O circuit configurations

**FeedThru filter frequency response comparisons**
FeedThru filters are attractive to use because of their small size, simplicity of implementation, high reliability and low cost. Though they do not clamp transients they have very wide attenuation characteristics – exceeding -30dB attenuation for greater than a 300 mHz wide RF spectrum. A frequency response comparison of standard varistors, LC T filter configured varistors and PI filter configured varistors is shown in figures 3a and 3b.

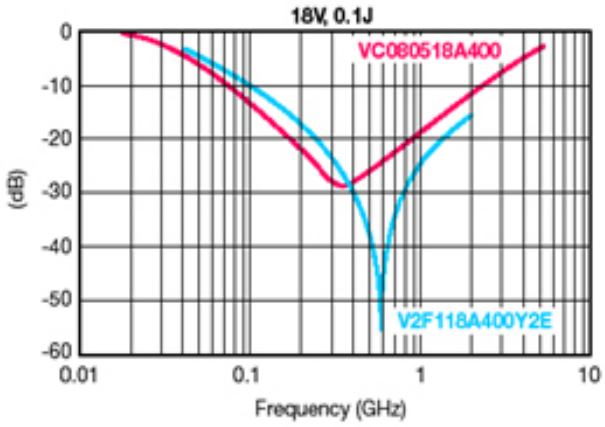


Standard 2 terminal MLV S21 (red)

LC-T configured version (blue)

Figure 3a

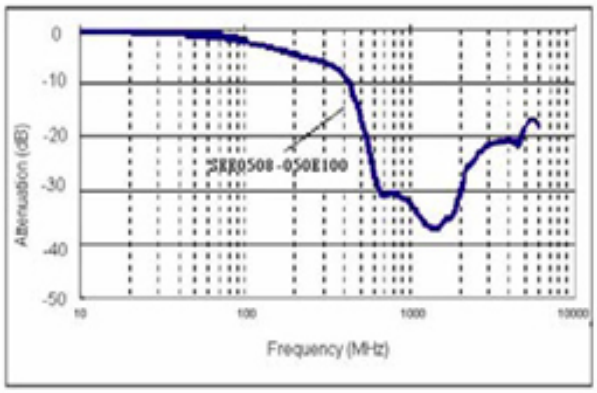


PI configured version

Figure 3b

The most common case size FeedThru used today is 0805 and 1206. Smaller case sizes of 0603 and now 0402 are emerging.

**Size reduction methods - embedded / shielded components**
The thought of embedding passive components within the PCB material could potentially reduce the EMI shield size dramatically. Many methods for integration exist ranging from ultra thin passive components placed within internal PCB cavities to LTCC and Multilayer Organic substrates (MLO)

Multilayer Organic substrates hold particular promise due to attractive cost. In the MLO approach a combination of materials and design methodologies allow the efficient design of tight tolerance RF components.

Multilayer Organic substrates can be shielded as shown in figure 4 and can contain any/all of the following structures: capacitors, inductors, diplexers, filters, baluns and couplers.

MLO discrete components are currently being rolled out into the market. As models processing and customer acceptance grow so grows the likelihood of self shielded MLO
Substrates thereby potentially reducing the size of EMI metal shields.

Multi-layer laminated organic (MLO-2)

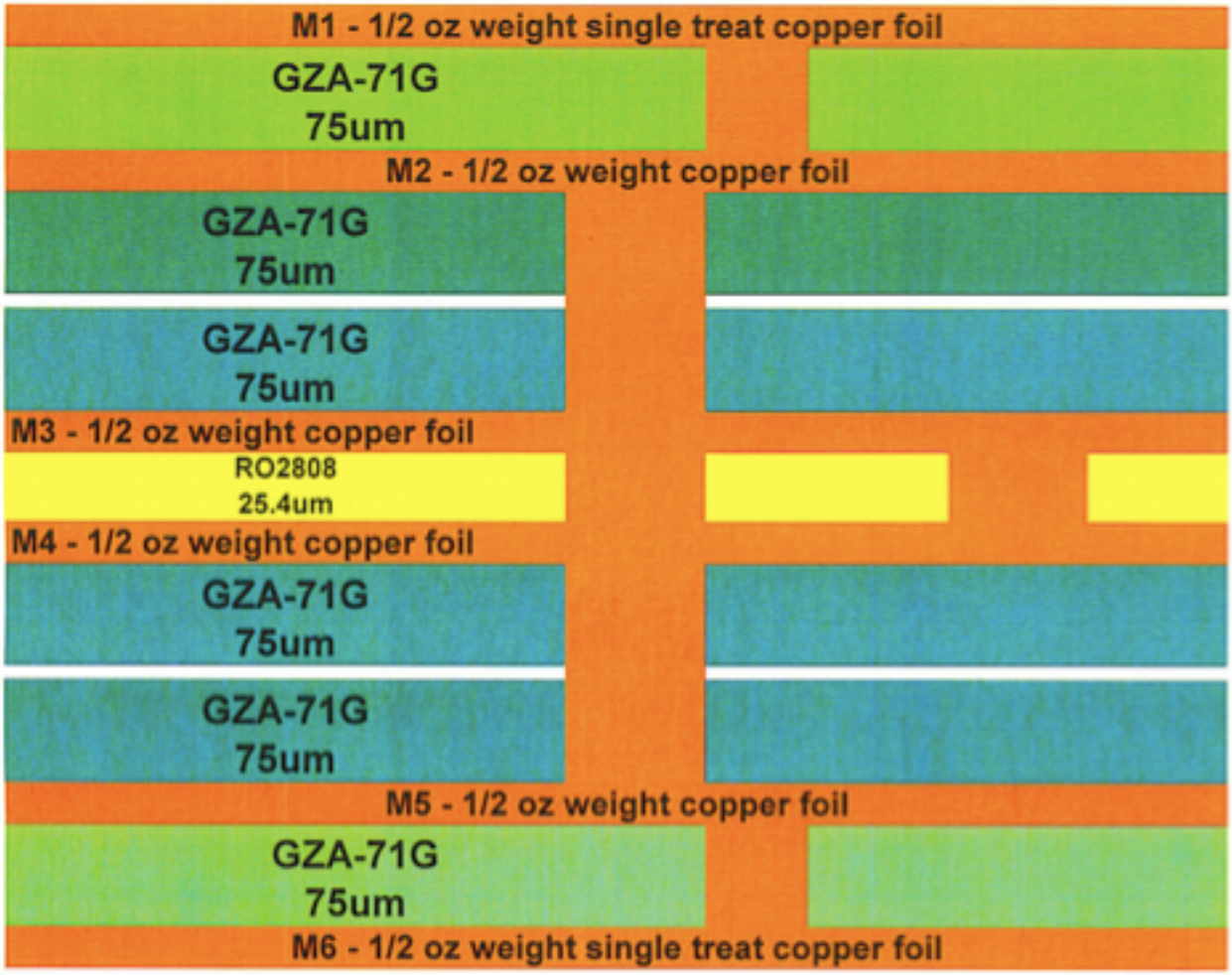


**Summary**
EMI shielding techniques are continuing to evolve greatly – from metal canvas sole options to conductive paints, plastics and high performance gaskets. Shield clip connectors are a method to make metal cans re-workable and thus potentially the best performing & cost attractive solution to some EMI shield needs.

A whole new family of SMT passive components are emerging - miniature SMT filters. These devices are available in LC T and PI configurations and can be made of traditional ceramic capacitor dielectrics as well as ZNO materials. ZnO based filters offer very specific EMI filter ranges and bi-directional transient protection.

A possible solution for EMI shield size reduction reside in the use of a MLO substrate with embedded components. MLO components have the ability to have shielding on outer layers.

**Source URL (retrieved on *09/19/2014 - 4:59am*):**
http://www.ecnmag.com/articles/2011/09/emi-shielding-connector-and-passive-component-technology-impacts?qt-recent_content=0