Concept Design Methods for Developing Winning Products

Mike Campbell, PTC

For many manufacturers, it's new ideas that keep business vibrant and growing. Fresh approaches to design, materials, and manufacturing all lead to more competitive and profitable products.

In fact, in a recent study by PTC, 81% of respondents agreed with the statement "to be successful in business, you need innovation." Furthermore, respondents said, the root of that innovation lies in concept design--the earliest representations, sketches, and mock ups of a new product.

Yet, despite the importance of concept design, in the same survey fewer than 1 in 5 said they would call their own processes "industry leading." Rather, most felt their companies could benefit from doing more to explore design alternatives early in development.

Time Versus Exploration

There's a reason so many companies don't look at more design ideas for a product: Product development teams want to evaluate options thoroughly and carefully and they also want to meet deadlines. That's why they limit the number of alternatives they're willing to review.

If you look more closely, you find out tight schedules aren't the only culprit however. Many companies still use paper sketches or even physical mock ups for early design. Others use sophisticated 3D software designed for engineering--not concept design. For most companies, there are better, and faster, ways to go.

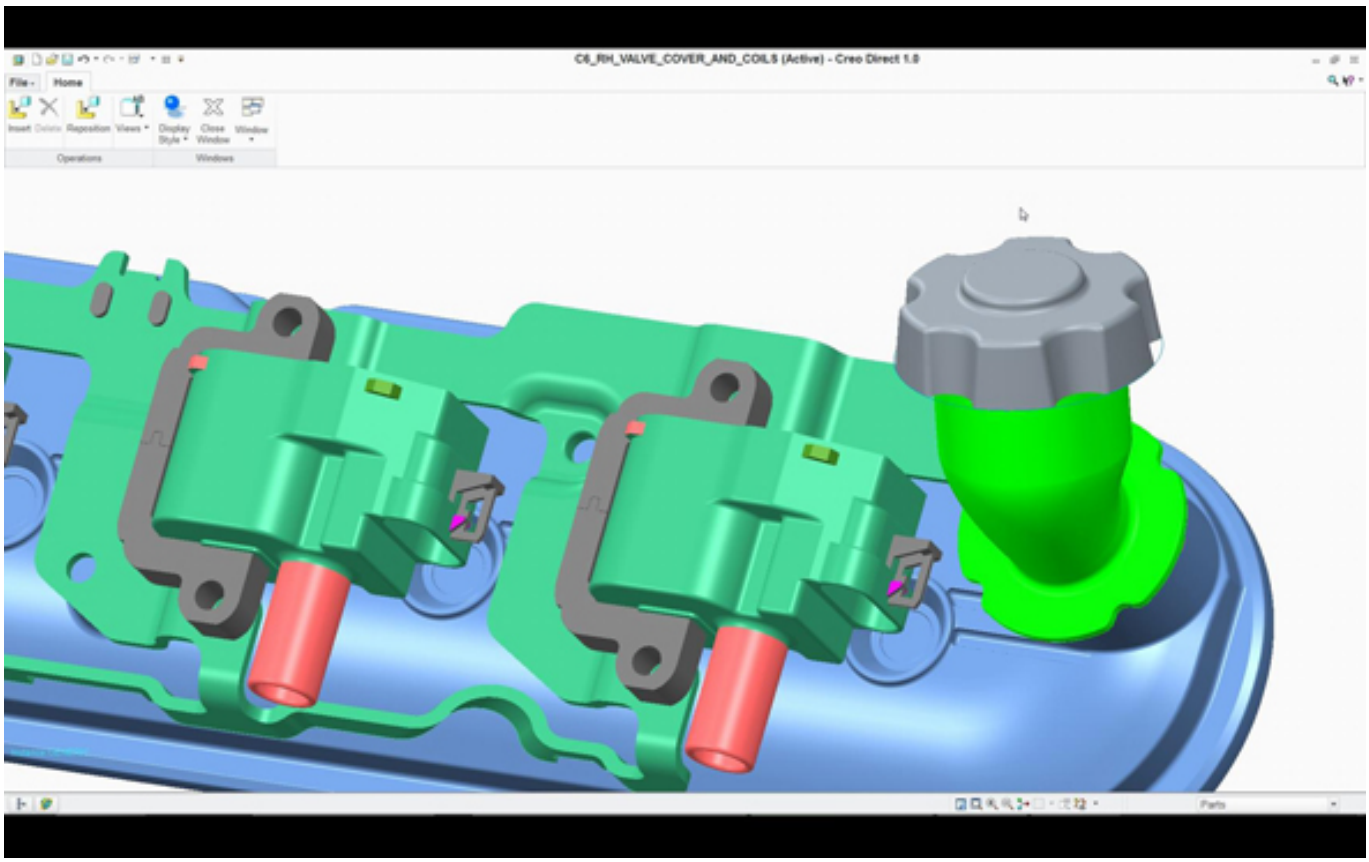

For example, a 2D sketching application, easy-to-use direct modeling tools, and rendering software can all help a company explore more without eating into the project timeline. Plus, by effectively digitizing concept design, manufacturers enjoy other benefits:

• IP protection. Going digital makes it easier to protect and date stamp intellectual property right from the start.
• Prototyping. Digitized concepts are easily adapted to rapid prototyping including technologies like additive manufacturing or 3D printing.
• Sharing. Digital designs are easy to share and manage--with a colleague down the hall or a client across the world.
• Building on ideas. With digital concepts, manufacturers can re-use existing designs to generate new ones rapidly. Centralized vaults of concept designs can be shared across all design teams.

Making the Most of Digitization

Some companies already use digitized processes but still lack the time to explore as many alternatives as they would like. That's because often manufacturers use different software for different stages of the design. For example, engineers may have a tool to make a basic sketch, another for creating the 3D model, yet another for rendering, analysis, etc. With each tool, or rather with each vendor, engineers find they have to recreate the model.

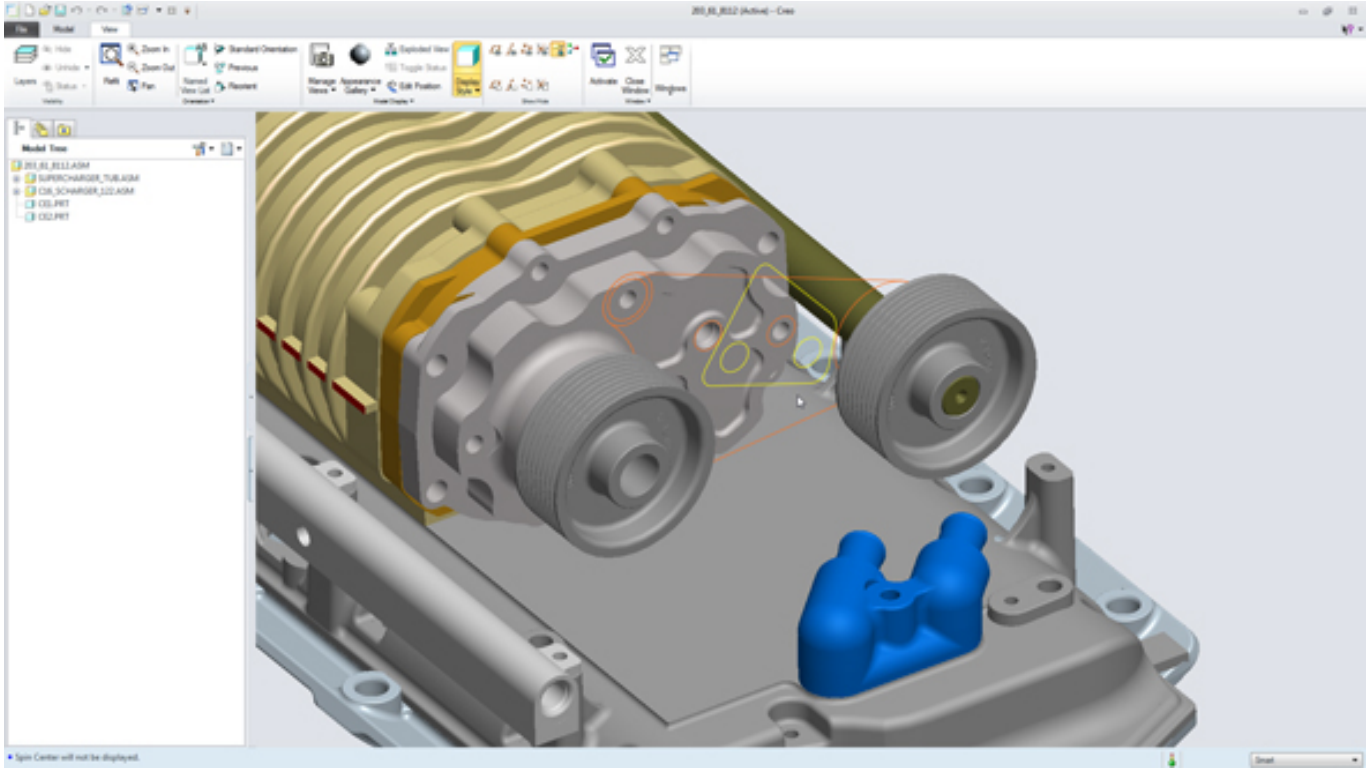

In PTC’s survey, we found that compared to companies using a single vendor:
• Those using 2 vendors were 4 times more likely to recreate data
• Those using 4 vendors were 7 times more likely to recreate data

That's not the only area where manufacturers aren't making the most of digitization. As teams evaluate concepts you expect a certain amount of failure and rejection, of course. But if the team doesn't record and communicate those unused ideas, others are likely to try and fail the same ideas over and over. Increasing cross-functional understanding of what concept ideas have been developed and even rejected should be critical to any manufacturer.

That's where product lifecycle management software can help. Approved or rejected concept ideas can be tracked, secured, and centralized, protecting the company’s IP. Rejected ideas can be quickly re-evaluated in new projects, giving teams a running start in developing new concepts.

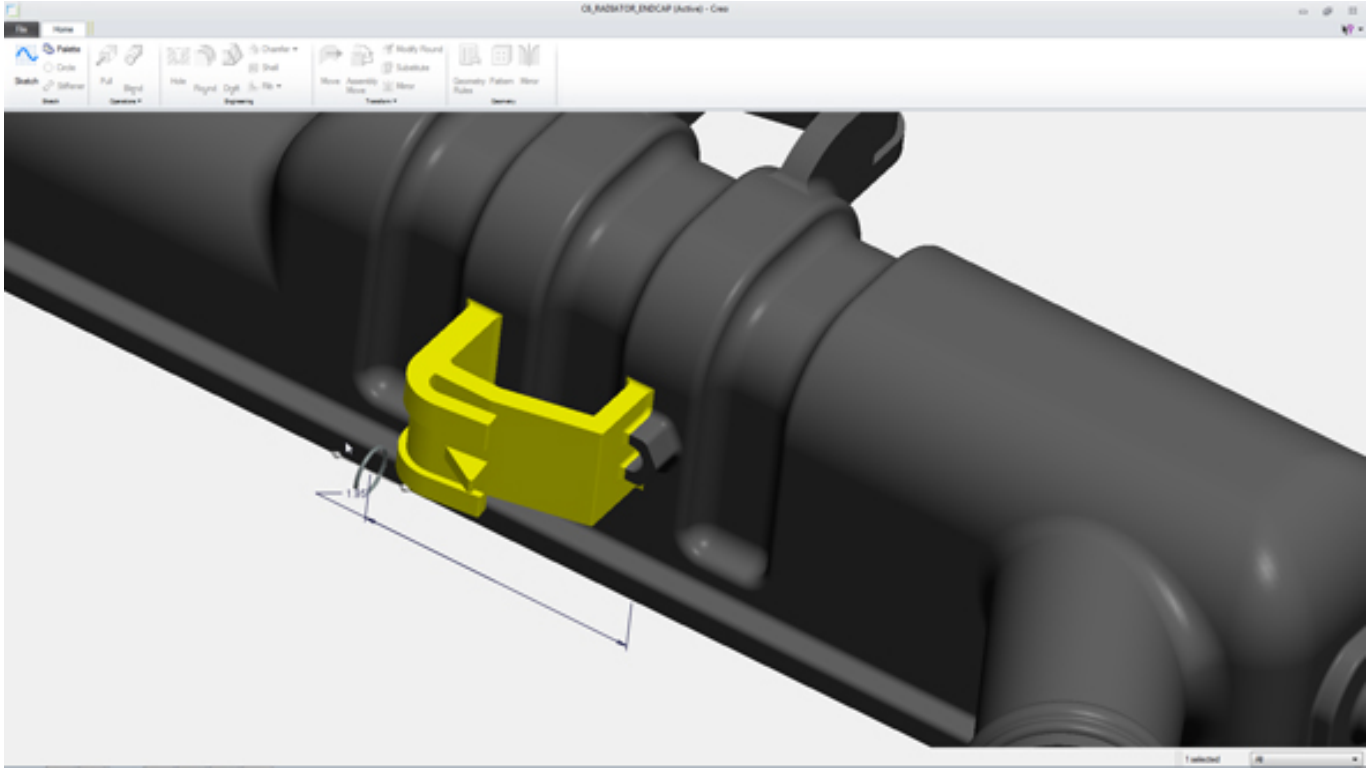

Improving Design Collaboration
Sharing concept designs with others is no longer just "nice to have." Increasingly, customers, suppliers, marketing, and key people in other offices are involved in early concept evaluation. These stakeholders not only gauge market acceptance, but also help select and refine the design concept.

Regular and broad collaboration with others helps eliminate non-viable concepts early. This, again, is a good reason to use digital 3D models and renderings--especially when communicating with non-technical audiences.

Solutions to Improving Concept Design
Vendors like PTC offer a broad range of software solutions for the development, management, and collaboration of concept designs.

Creo, our design software, offers software apps for sketching, 3D concept modeling (including easier-to-use approaches like direct modeling), and sophisticated parametric modeling for detailed design.

Creo includes viewing and collaboration apps for sharing designs with others, including markup, annotation, and measurement.

Windchill, our product lifecycle management solution, can manage data across the enterprise from concept design to manufacturing.

With PTC, companies can improve the number of concept designs they explore in the same time they have today. Plus, our technology can help manage the IP generated during concept design, centralize and protect data, and provide continuity as engineering builds on those same models throughout product

development.

Source URL (retrieved on *06/19/2013 - 11:02pm*):
http://www.ecnmag.com/articles/2011/08/concept-design-methods-developing-winning-products?qt-most_popular=0&qt-recent_content=0