Contactless Capacitive Sensor Signal Conditioners most practical for harsh environments

David Grice, System Architect, ZMDI (www.zmdi.com)

Capacitive-based sensors have been in use for many years, but they are seeing a rapid increase in interest for a variety of reasons. One of the primary reasons for this is the expanding number of harsh environment applications where capacitive sensing is the best choice because it permits contactless sensing that is sealed from harsh or hazardous environments. Such harsh environments frequently occur in industrial control processes that contain corrosive chemicals, high temperatures, explosive gases, or even radioactive contamination.

Another important factor in the growth of capacitive-based sensor use is the availability of cost-effective sensor-interface integrated circuits that make them easy to use. Before the advent of such circuits, using capacitive sensors in applications requiring high accuracy and linearity over a wide range of conditions was expensive, cumbersome, and complicated. There are still challenges, however, to interfacing with capacitive-based sensors, and it is important to select a Sensor Signal Conditioner (SSC) device that makes the deployment inexpensive, fast, and accurate, especially in a high-volume production environment. While some selection criteria are obvious and easy to evaluate in a datasheet or block diagram, others that are just as critical to successful implementation are more subtle. This article addresses how to look for those less obvious aspects and make the best choice for a capacitive-based sensor interface.

Figure 1 shows the block diagram of an SSC for capacitive sensors. It features a configurable sensor interface that allows measuring sensors with either single-ended or differential outputs. For single-ended applications, the desired output is proportional to the absolute value of capacitance, whereas for differential capacitance the sensor consists of two capacitors that vary ratiometrically as the sensed quantity changes. **Figure 2** gives sample system diagrams of these two configurations and the corresponding output representations. Referring to Figure 2a, the output of the SSC will be an analog signal in the form:

Analog Out = k * (Csense – Coffset) / Cref

where Csense is the sensor capacitance and Cref is an internal reference capacitor contained in the SSC. In some SSC devices, an additional internal capacitance, Coffset, will be available to improve the correction algorithm. The proportionality constant, k, is determined by the calibration process that will be described in more detail below. Examples of sensors with this configuration include gauge pressure, proximity, touch, and humidity sensors.

For Figure 2b, the output will be a digital word that has the form:

Digital Out = k * C0 / (C0 + C1)

Where k is a similar proportionality constant and C0 and C1 are the ratiometrically varying capacitances of the sensor. Typically the sum of C0 and C1 is a constant value. Examples of sensors with this type of output include differential pressure, linear or angular position, tilt, and acceleration sensors.

The device shown in Figure 1 also provides beneficial features like an on-board temperature sensor and the ability to choose between an integrated or external reference capacitor. These features allow the same part to interface with a wide range of sensor types in different system configurations while keeping external component count low.

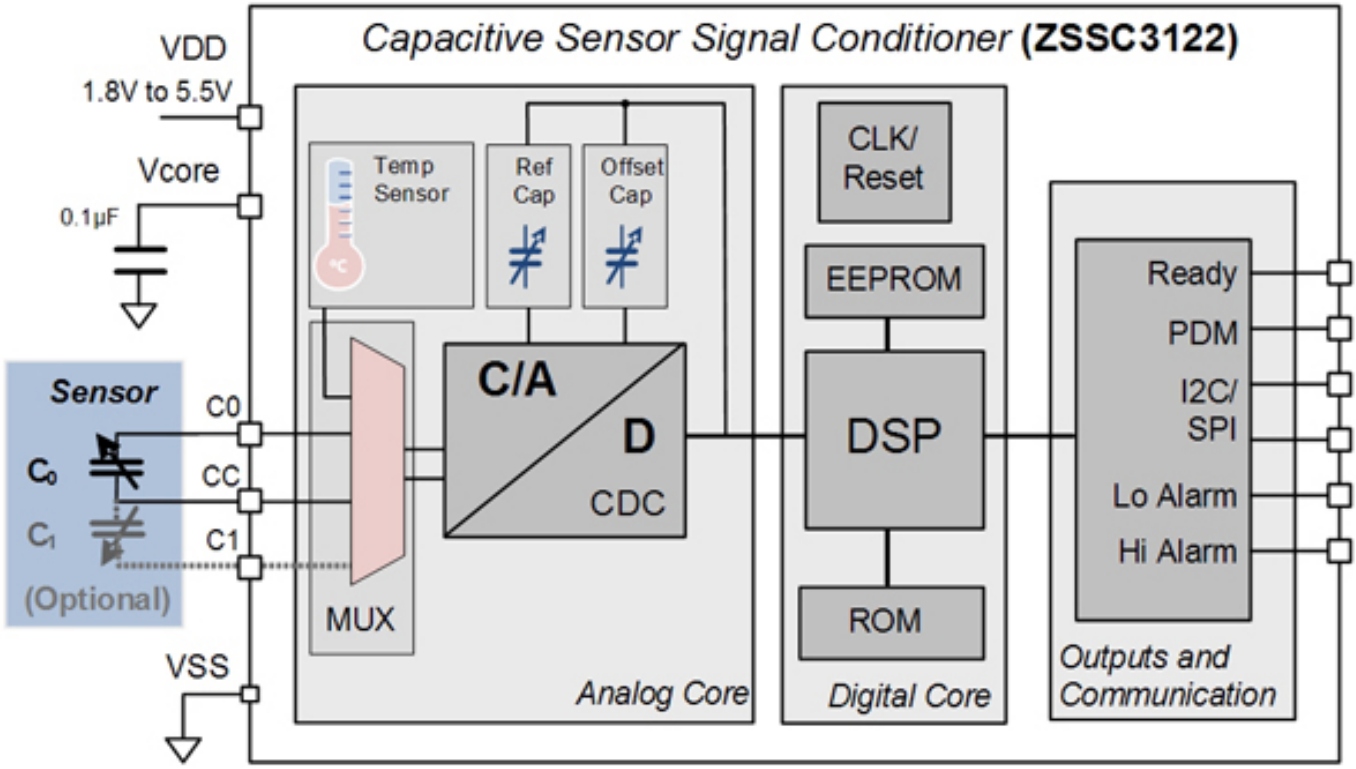

Figure 1. Block diagram of a capacitive-input Sensor Signal Conditioner, ZSSC3122, that provides flexible input configuration, multiple calibration algorithms, and versatile digital and analog outputs.

The next important section of the SSC is the Capacitance to Digital Converter (CDC) that converts the capacitance to a digital value, and a digital state machine that

translates this value to a calibrated output based on a correction algorithm and pre-stored calibration coefficients. This is the core of what makes an SSC cost-effective, accurate, and easy to use. A good sensor interface device will provide several calibration algorithms and provide supporting hardware and software to optimize and facilitate their use.

This calibration mechanism of the SSC is not directly apparent when comparing block diagrams and quantitative parameters like resolution, sampling rate, supply voltage, etc. However, it is critical to evaluate the design, implementation, and level of support for the calibration process when choosing the best part for implementing an optimal sensor system. All capacitive sensors are definitely not alike when it comes to the amount and type of correction that is necessary to meet system accuracy requirements. Some sensors, for example, might be almost linear and relatively insensitive to temperature effects while others are extremely nonlinear with a large offset capacitance and high sensitivity to temperature. Understanding this, and choosing a part that provides an easy path to implementing the best correction algorithm is vital to good system performance and low production costs.

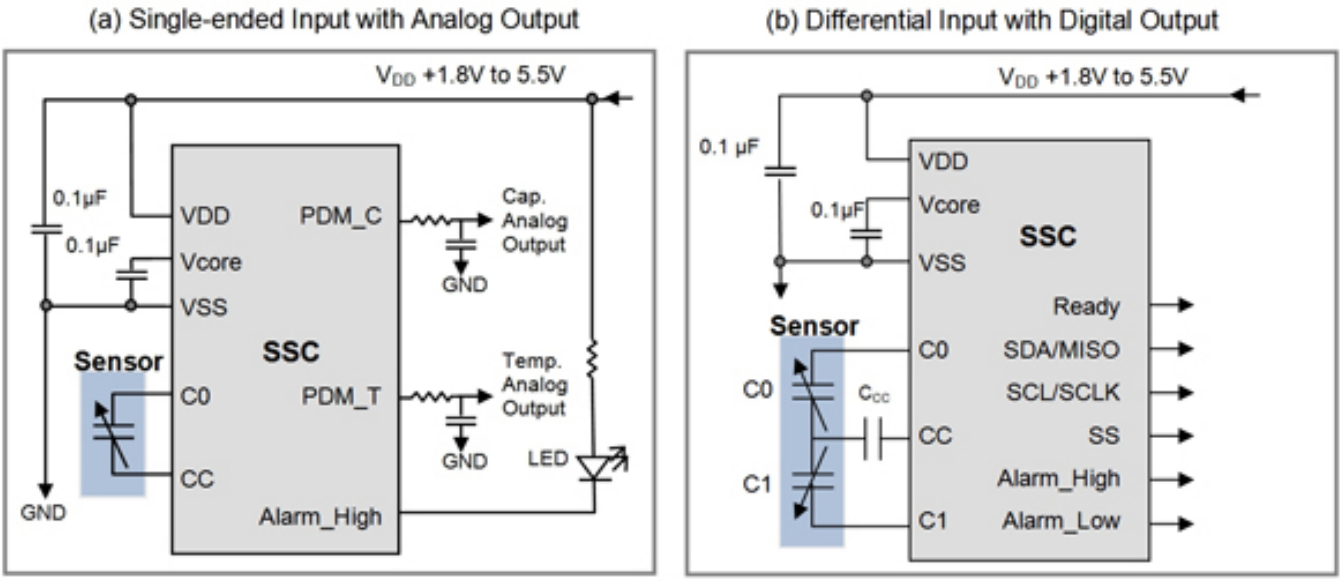

Figure 2. Example system implementations for: a) single-ended capacitive sensors and analog outputs, and b) a differential capacitive sensor with digital outputs.

As an example, the SSC shown in Figure 1 allows the designer to select from one of ten correction algorithms. These include linear or piecewise linear offset and gain, 2nd or 3rd order nonlinear offset and gain, and additional options that correct for linear or nonlinear temperature nonidealities. This might seem like a bewildering array of options from which to choose, but with basic knowledge of the sensor characteristics over its input and temperature range, and supporting calibration software and hardware from the SSC manufacturer, the system designer can quickly choose, compare, and evaluate different algorithms and optimize the system.

When selecting an SSC, it is important to evaluate what level of development support is available. As a minimum, the manufacturer should provide a development kit with software that guides the user through the process of selecting

the desired algorithm, making the appropriate sensor measurements, inputting the data, and finally programming the part with the calculated calibration coefficients along with a unique ID code to pair the SSC with its mated sensor. After completing the coefficient programming, the kit should enable the user to verify and evaluate the selected algorithm. Figure 3 is a screenshot from development kit software showing data capture and input for a 3-point calibration (1st and 2nd order gain and offset correction without temperature compensation). In this instance, the user supplies information about the sensor input range and correction algorithm, and then the software suggests measurement points and prompts the user for the values. It then displays the calculated coefficients, allowing the user to evaluate the calibration and make changes, and ultimately programs the final selections into the SSC device.

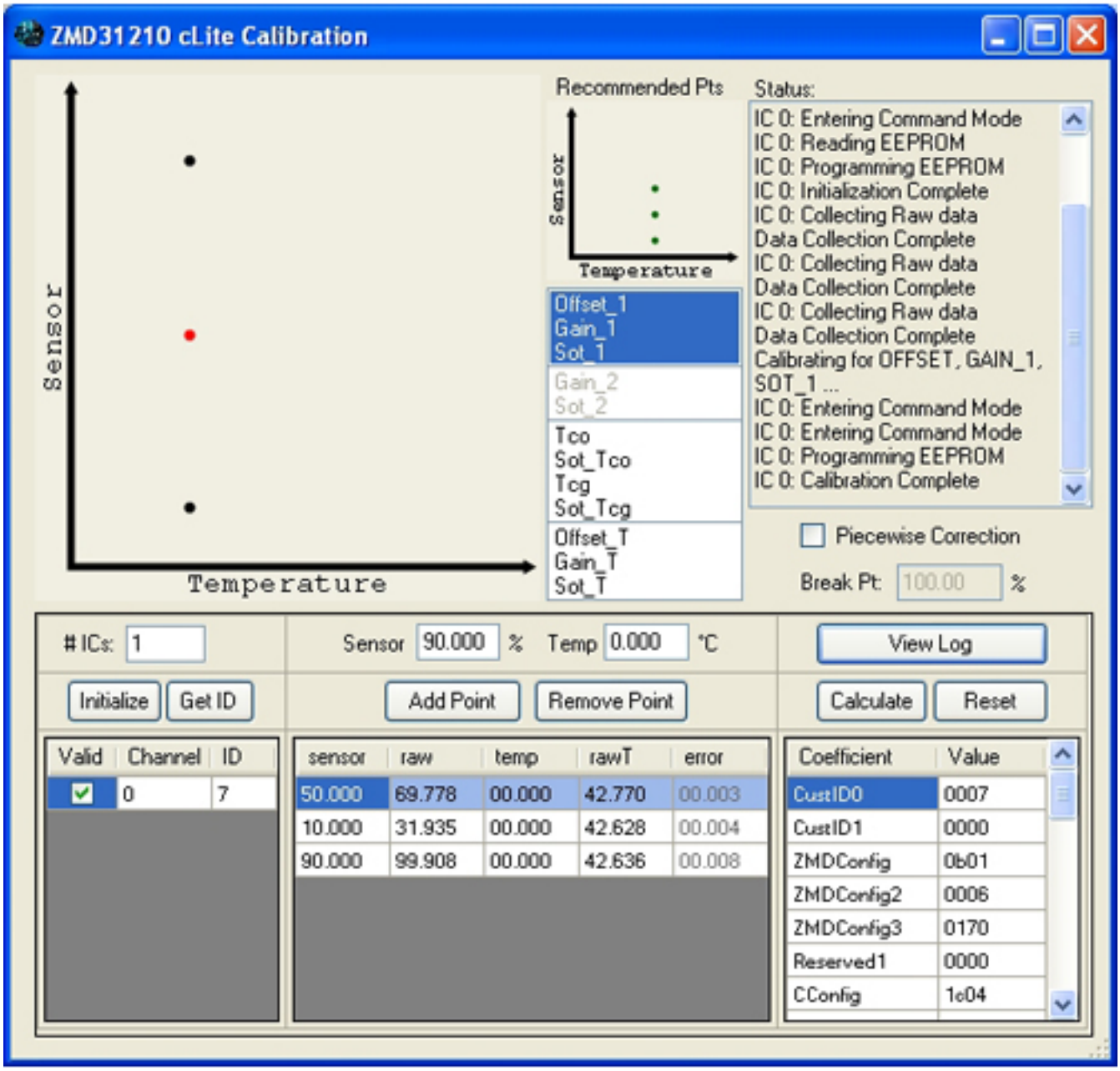

Figure 3. Sample screenshot from manufacturer-supplied development software. The software gathers information from the user, makes recommendations for calibration measurements, and programs the calculated correction coefficients into the SSC.

Using such a development kit is a powerful and convenient tool for system development and optimization. However, once the best calibration algorithm and measurement dataset have been determined, the production environment requires a fast and cost-effective means to calibrate and program large numbers of devices simultaneously. This is a significant advantage of a “one-pass” calibration scheme. It allows the calibration data to be taken in a single pass, and then the coefficients can be calculated and programmed using external computation after all data have been collected.

As an example, consider a pressure sensor and the 3-point calibration referenced

above. Output data are collected at three pressures, and then the calibration coefficients are calculated offline and programmed into the SSC only after all measurements are complete. Thus, the data can be collected as fast as the pressure environment and sensor output can settle. Higher-order correction algorithms and temperature compensation require more data points, but the advantage of taking all data first and then programming the coefficients in a single step remains the same. The advantage is even greater when temperature measurements are required, because the temperature chamber usually takes much longer to settle. Furthermore, with a device that uses a digital bus for communication such as this one, it is possible to calibrate and program many devices simultaneously. This provides significant time and cost savings in production.

Other important considerations are the format and flexibility of the sensor output and programming interface. The device in Figure 1 provides two types of digital communication protocols (I2C™ and SPI) and one analog output using Pulse Density Modulation (PDM). The availability of multiple formats is important for compatibility with a wide range of standard microprocessors and system buses. Providing the sensor output in a digital format has a number of advantages, but one of the most important for harsh environments is that it allows remote placement of the SSC, closer to its sensor, thus minimizing parasitic capacitance, noise, and EMI problems. Don’t ignore the value of analog outputs, either, even when they are not required for the end use. Analog outputs are convenient and facilitate testing and evaluation of calibration algorithms without an intelligent interface. Similarly, outputs such as High/Low alarm pins provide for independent or redundant detection of out-of-limit or fault conditions.

Capacitive-based sensors play an important role in harsh environment applications, so their numbers will continue to increase. Successful designers of these systems must choose interface devices that provide not only suitable electrical performance, but also the fastest and most cost-effective path from conception to production. In addition to comparison of standard datasheet electrical parameters and block diagrams, evaluating the available calibration algorithm options and level of support for their optimization is a critical part of that selection. An integral part of this support is system-level knowledge from the SSC manufacturer that is captured and provided in development hardware and software, application notes, and field application consultation and support.

About the Author

David Grice is a System Architect at ZMD America providing engineering support for designers of custom ASICs and standard product ICs. He has 25 years of experience in the semiconductor, defense, nuclear, and aerospace industries and has an MSEE from Texas Tech University.

Source URL (retrieved on *04/23/2014 - 9:08pm*):
http://www.ecnmag.com/articles/2011/07/contactless-capacitive-sensor-signal-condi

tioners-most-practical-harsh-environments?qt-most_popular=0&qt-recent_content=0