BLDC Motor Controller Chips Help Conserve Energy

Scott C. Chen, Fairchild Semiconductor, www.fairchildsemi.com

How to save energy while maintaining a small carbon footprint is a hot topic receiving worldwide attention. There is now a global effort to control environmental pollution and prevent severe climate fluctuations. There are also attempts to reach agreements between countries on how to best conserve the earth's limited energy resources. For most people, saving energy means turning off the power whenever it is not needed, taking the bus instead of driving a car, energy recycling, and so on. However, in addition to these adjustments in lifestyle, there is a less noticeable problem of energy efficiency.

According to research by the Electric Power Research Institute (EPRI), motors account for 51 percent of the world's total energy consumption, at an annual cost of 95 billion US dollars. The energy consumed by other sectors is comparatively lower. Lighting, for example, accounts for 19 percent, cooling and heating 16 percent, and IT 14 percent.

In fact, motors consume the most energy no matter what the scenario in which they are being used, whether it is household or commercial. In 2007, for example, the total electric power consumption of Taiwan was 117.2 billion KWH. Of that 117.2 billion KWH of electric power, motors consumed 82 billion KWH, accounting for 70 percent of the total power consumption. If the energy efficiency of motors can be improved, there could be a significant savings in energy.

Motor Efficiency Level	UK	EU	Japan	Australia/ New Zealand	Taiwan
Premium	NEMA MG1-2003 Premium/2002 NEMA Premium	–	–	–	–
High Efficiency	EPAct/11997 IEEE 112	"eff1"1998 CEMEP/IEC 60034-2 IEC	JIS C4212/ 2002	MEPS/ 2006	CNS14400/ 2003
Standard	–	"eff2"/1998	–	MEPS/ 2001	CNS2934
Early Regulation	–	"eff3"/1998	–	IEC 60034-1	–

Source: Baldor Electric/ITRI

This explains why all

countries are actively making plans to improve the power efficiency of motor and lighting products.

Household appliances basically consume power for two purposes: converting electric power into other forms of energy output (lighting, TV), and powering motors (refrigerators, washing machines, air conditioners, fans, vacuum cleaners). Powering motors usually accounts for 70 percent of the total electricity a household consumes. According to research done by the Taiwan Engineering Research Institute, if motors in Taiwan had an improved energy efficiency of 10 percent, there would be an annual energy saving of 10 billion KWH. This would be equivalent to the power generated by a large-scale nuclear facility. If the total annual global production of energy amounts to 20.2 mega KWH, such an improvement would result in energy savings of a whopping 2 mega KWH. This is equivalent to the power generated by 200 large-scale nuclear facilities.

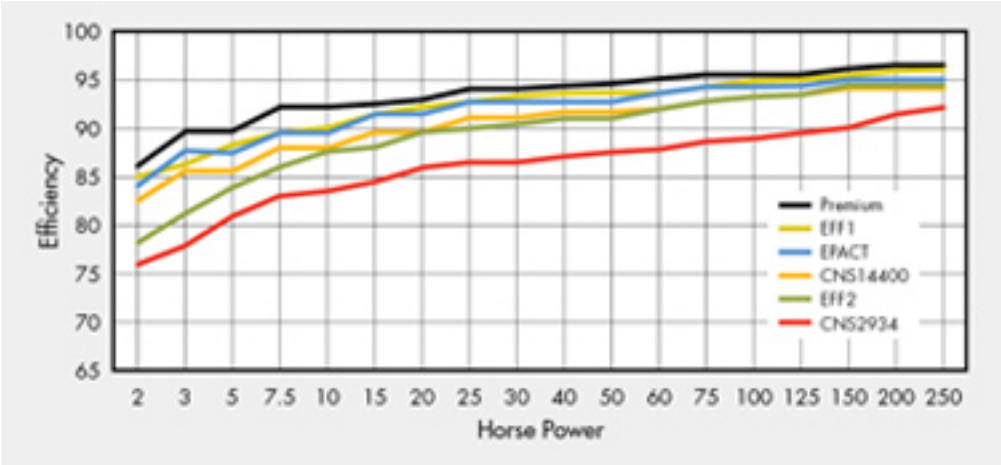

Motor efficiency regulations from different countries and regions.

AC and DC are the two types of motors used in household appliances. DC can be further categorized as either brushed or brushless DC (BLDC) motors. Considerable breakthroughs have recently been made in both the technology and production of BLDC motors. The BLDC motor offers many advantages such as being noise-free, maintenance-free, and also having a compact size and long lifetime. They also operate with high efficiency, thus making a significant contribution to energy saving and environmental protection.

Compared with AC and brushed DC motors, BLDC motors offer a higher level of technology which in turn delivers a higher value. Given the twin pressures to reduce energy consumption and protect the environment, BLDC motors inevitably become the favored option.

	AC Motor	BLDC Motor
Power/Efficiency	150W/35%	50W/90%
Noise	Hum	Complete Silence
Size/Weight	AC Motor is bigger in size and 33%–50% heavier than BLDC Motor	
Rotation Speed	Limited to the AC frequency (50/60HZ) Non-adjustable	Stepless Control / Auto adjustment by working temperate
Temperature Rise	95°C	40°C–45°C due to higher efficiency
Application Range	Single Purpose	Multiple Purpose
Life Span	Short	Long

BLDC motors can use two control methods: Trapezoidal Control and Space Vector PWM (SVPWM), of which SVPWM is the most favored by the industry.

Space Vector PWM

The sinusoidal signals needed for precise motor control require high-resolution encoding. Unfortunately, this approach proves to be very expensive and unrealistic for mainstream applications. The solution for this is the Space Vector PWM.

The functioning of the SVPWM depends on the three-phase waveform generated as it attempts to form a circular rotary field between the rotor and the stator. The controller uses field fluxes generated by different switching modes to approximate to the base circular field. The actual field generated is compared to the base circular field, which enables switching control and the creation of the required PWM wave. In a BLDC motor, the controller and the motor are treated as a holistic entity. The SVPWM controller is able to create a constant field amplitude as well as a circular field by approximating to a circular field by means of an internally tangent polygon.

The SVPWM control can use either the open loop flux method or the closed loop flux method. The open loop flux uses two non-zero vectors and a zero vector to create an equivalent voltage vector. There is no limitation on the voltage vector created if the sampling time is short enough. The output voltage generated this way is 15 percent higher than when using sinusoidal modulation and the sum of the effective harmonic currents approaches the minimum.

By comparing the estimated flux with the given flux, the closed loop flux method introduces flux feedback to control flux and the change rate. This ultimately determines the next voltage vector which creates the PWM wave required. This method overcomes the shortcoming of the open loop flux -- an inability to handle the problem of large stator resistance that can occur when a BLDC motor operates at low speed. Thus the closed loop flux approach can reduce vibration and noise.

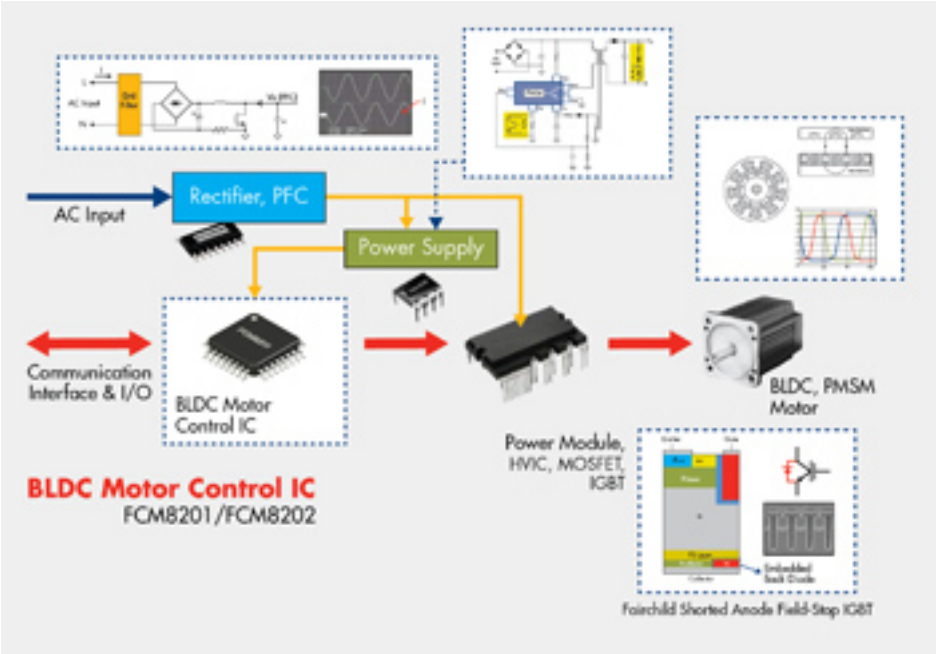

Fairchild offers a series of BLDC motor reference circuits for its products. In particular, its motor control IC FCM8201/02 which features two drive modes (square, sinusoidal) that can be selected to suit different products. FCM8201/02 also directly integrates several protective functions, as opposed to the software development normally required to implement these functions. The FCM8201/02 actually requires less of a development capability and enables shorter time-to-market. Other products like the company's smart power modules, PFCs and power management ICs offer quick total solutions.

Products can be designed for a variety of applications. The square-wave drive brushless motor has low switching loss as an advantage though it doesn't have accurate rotor feedback. Due to the higher torque, this type of motor is suitable for high-power output applications. These applications include vehicles, pumps, machine tools, industrial fans, and outdoor appliances.

Sine-wave drive brushless motors offer all the advantages of smooth, noiseless operation without vibration. These motors are suitable for vacuum cleaners, air conditioners, refrigerators, washing machines, dish washers and fans.

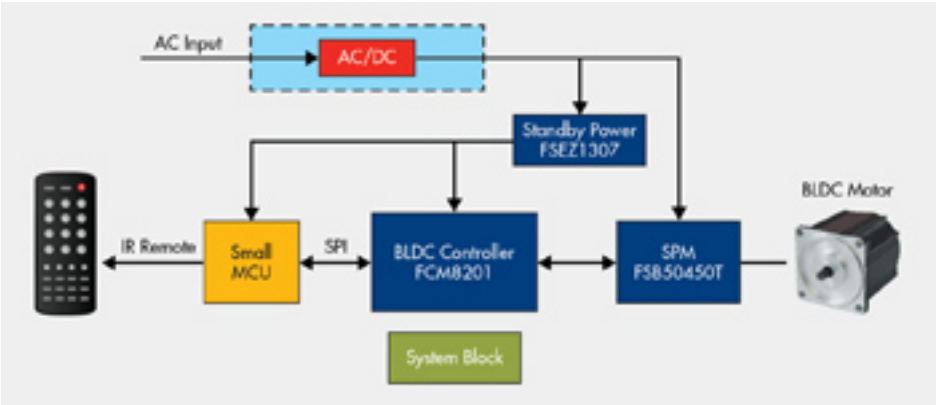

Household Fans

All fans used in the home should naturally, and noiselessly and efficiently circulate

the air whether they are bladeless or general household standing and ceiling fans. Fans should not simply blow air directly onto people; they need to enhance the comfort of the home environment.

In the past, AC motors could only achieve this level of functionality and efficiency by increasing the amount of control circuitry and materials used. This only resulted in larger and significantly more expensive fans. On the other hand the BLDC is highly efficient in both its use and manufacture. It can easily incorporate an intelligent control unit and so provide the genuinely comfortable home consumers want.

The inclusion of circuit protection is another characteristic of the design approach from Fairchild. To avoid current overload and subsequent damage to the chip, its FCM82XX Series has an integrated Over Current Protection (OCP) circuit.

Over Current Protection

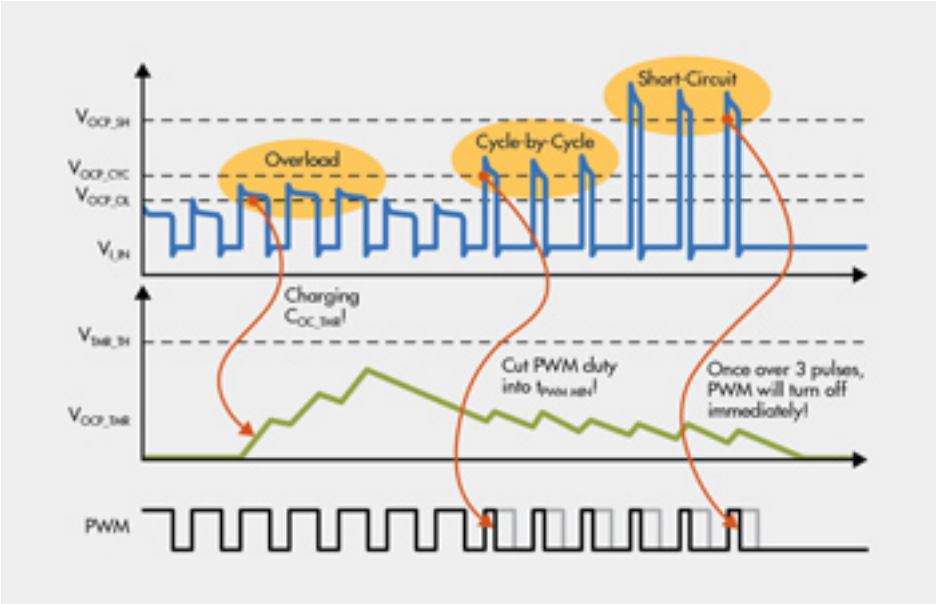

FCM8201/02, from Fairchild provides three modes of over current protection. The first mode is protection from current overload, where the threshold voltage (VOCP_OL) is 1.4 V. The second mode is Cycle-by-Cycle Current Protection, where the threshold voltage (VOCP_CYC) is 1.5 V. The third mode being Short-Circuit Current Protection where the threshold voltage (VOCP_SH) is 2.5 V.

Conclusion

In conclusion, there is increasing recognition in the world today for need to protect the environment and conserve valuable energy resources. A common goal is to achieve this while lowering our reliance on nuclear power. If this approach was adopted throughout society the use of high efficiency motors could make a key contribution.

This necessitates the use of motor-drive chips, as we see in the sensorless BLDC or the PMSM motor. The PFC and other high-tech motor drives are the wave of the future. When the total design solution is also simulated in software, the result can

be optimized efficiency, simplifying the design process and shortening time-to-market.

Source URL (retrieved on *04/23/2014 - 10:06pm*):
http://www.ecnmag.com/articles/2011/07/bldc-motor-controller-chips-help-conserve-energy?qt-most_popular=0