High Reliability Passives Remain Vital in Medical Contact, Imaging, and Analysis

Stephen Oxley, tt electronics Fixed Resistors Busines Unit

The great advances of recent years in medical diagnostic and therapeutic capability owe as much to electronic engineering as they do to medical science.

Furthermore, medical devices are leaving the confines of hospitals and serving the growing community-based and home-based healthcare markets. This combined extension of capability and access is supported by a growing level of electronics development, much of which is based on the increasing computing power of digital systems. However, the human body remains analog, and there will always be an important role for high reliability passive components in three broad areas:

- **contact**
- **imaging**
- **analysis**

The first area, **contact**, includes all devices with electrical connection to the body. Examples include the delivery of high-energy pulses for defibrillation, the detection of biologically generated signals for ECG or EEG and the measurement of body impedance for respiratory or plethysmographic monitoring. The **image** area encompasses X-ray, MRI and ultrasound, all with their own special demands on resistive components. And finally **analysis** covers the area of IVD and laboratory instruments.

Contact

Defibrillators need stable and repeatable measurement of the charging voltage, as this determines the amount of electrical energy delivered to the patient.

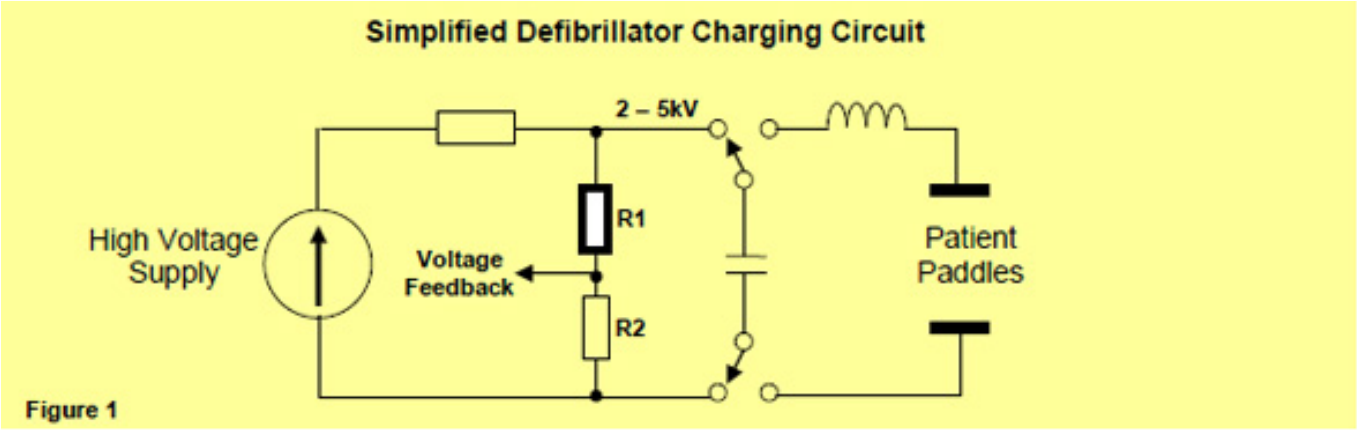

In the simplified charging circuit of Figure 1, R1 is a high value resistor, normally in the range 5M to 50M, which, together with a low value resistor R2, forms a potential divider for voltage feedback.

The critical features of this high voltage resistor are linearity, expressed by voltage coefficient (VCR) and temperature coefficient (TCR), and long-term stability under voltage stress. The error budget for resistance value can be expressed as:

Error = Tolerance + Solder heat stability + TCR error at T_{min} / T_{max} + VCR error at V_{max} + Environmental Stability

The first two terms are commonly eliminated by post-assembly calibration. The remaining three are described in detail below.

The resistor technology best suited to this application is thick-film. The linearity limits are expressed as the temperature and voltage coefficients of resistance, which are limits on the reversible resistance changes illustrated in Figure 2. The temperature characteristic is typically “U” shaped with limits expressed by the TCR, which is normally in the range ±25 to ±100ppm/ºC. The TCR error may be minimized by choosing the highest possible ohmic value so as to reduce the self-heating, and by a layout which avoids proximity to heat generating components.

The voltage characteristic, by contrast, only ever has a negative gradient, with a limit expressed by the VCR, which is typically -1 to -5ppm/V. High voltage resistors use special design techniques to minimize VCR, but ultimately there is a trade-off between VCR and product size. It should be noted that, as the gradient increases at high voltage, VCR error can be reduced by only operating the resistor at up to 75% of the full rated voltage. Furthermore, if the nominal VCR is known, compensation is relatively simple.

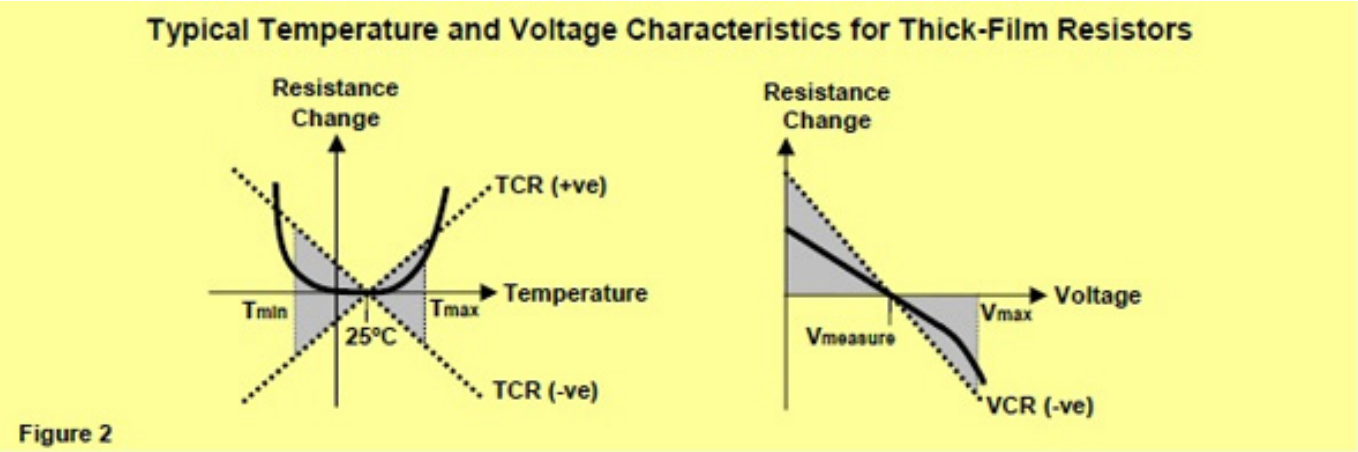

Figure 2

The environmental stability describes the limits of non-reversible resistance change under given loading and environmental conditions. The most demanding condition is high humidity, but materials are available which seal the resistive element to achieve typical resistance changes below 0.25% after 56 days at 95% RH and 40ºC.

Where **ECG monitors** and analytical instruments require sensitive first stages for amplification of small signals, high ohmic values are required in the feedback resistor. TT electronics has long specialized in providing values outside the range normally available, with glass sealed resistors extending to 100T? (10^{14}?) and flat

chips extending to 50G.

Imaging

X-ray systems require stable and accurate high voltage supplies to provide the accelerating voltage for X-ray generation. Voltages are typically in the 50kV to 100kV range, and the circuit is often assembled in an oil-filled chamber. This reduces clearance constraints on the layout, thus enabling a compact X-ray head design.

TT electronics has extensive experience of supplying ultra-high voltage thick-film solutions for voltage division in this application and can supply various standard and custom formats. One design approach is to use T Series axial resistors (pictured) which provide up to 100kV in a single element in an oil-filled assemby. Terminations are either wire or screw, allowing stacking into multiple resistor assemblies. In order to eliminate the possibility of air pockets an unsleeved version should be selected. It is possible to supply these parts in matched sets to give accurate ratio tolerance or to give very low TCR by means of cancellation.

Ultrasound transducers require termination networks capable of operating at high frequency and providing multiple channels of resistive termination. A typical requirement is 128 channels and performance up to 15MHz. TT electronics can provide standard and custom thin-film resistor networks in a wide variety of packaging styles including SOIC, QSOP, TSSOP. The latest addition is a BGA part which can offer up to 32 terminators in a 6.4 x 2.5mm footprint with return loss below -20dB to 3GHz. This meets the requirement above within the space of four 2512 chips.

MRI scanners require control circuits which are insensitive to extremely high magnetic field strengths, and this calls for components which are free of ferrous alloys and nickel. These are the materials commonly used in the termination caps fitted to the ends of most types of axial resistor and as an anti-leaching barrier in chip resistors. Capless through-hole resistors and nickel-free chip resistors are available for such requirements.

Analysis

For a broad range of **laboratory analysis equipment**, precision resistors are required with tight tolerance, low temperature sensitivity and high stability. The input stage of an instrument with a resistive sensor, for example a thermistor in a precision temperature monitoring circuit, consists of a bridge of resistors which must be closely matched in value. In such a case it is the ratio between values which matters rather than the absolute values themselves. Likewise, the maximum difference between TCRs, that is the tracking TCR, is more important than the absolute TCR.

There are two possible solutions in these cases. First, discrete precision resistors may be supplied in matched sets with specified ratio tolerance and tracking TCR. Second, thin-film networks with multiple elements provide a combination of high precision and an integrated solution. These are available with conventional nichrome elements as well as high stability versions which exploit the self-

passivating properties of tantalum nitride film.

The medical sector, perhaps more than any other, generates challenging requirements for passive component performance and reliability, and component manufacturers are continuing to support this area with new product development.

Source URL (retrieved on *07/24/2014 - 10:07am*):
http://www.ecnmag.com/articles/2011/05/high-reliability-passives-remain-vital-medical-contact-imaging-and-analysis?qt-recent_content=0&qt-most_popular=0