Designing more efficient white goods

Pushek Madaan and Prakhar Goyal, Cypress Semiconductor, www.cypress.com

White goods have become an integral part of our lives, from controlling ambient temperature and lighting to cooking our food and a host of other day-to-day activities. Although white goods may be used for a variety of applications, most of them operate on a similar concept. Each has a master processor that communicates with a legion of different control systems such as the temperature control, motor control, keypad, LCD, etc. Each control system in turn has one or many sensors and may use an independent microcontroller. In this article, we will discuss how to integrate the control systems in a microwave oven using a single microcontroller. A block diagram of a microwave oven is shown in Figure 1.

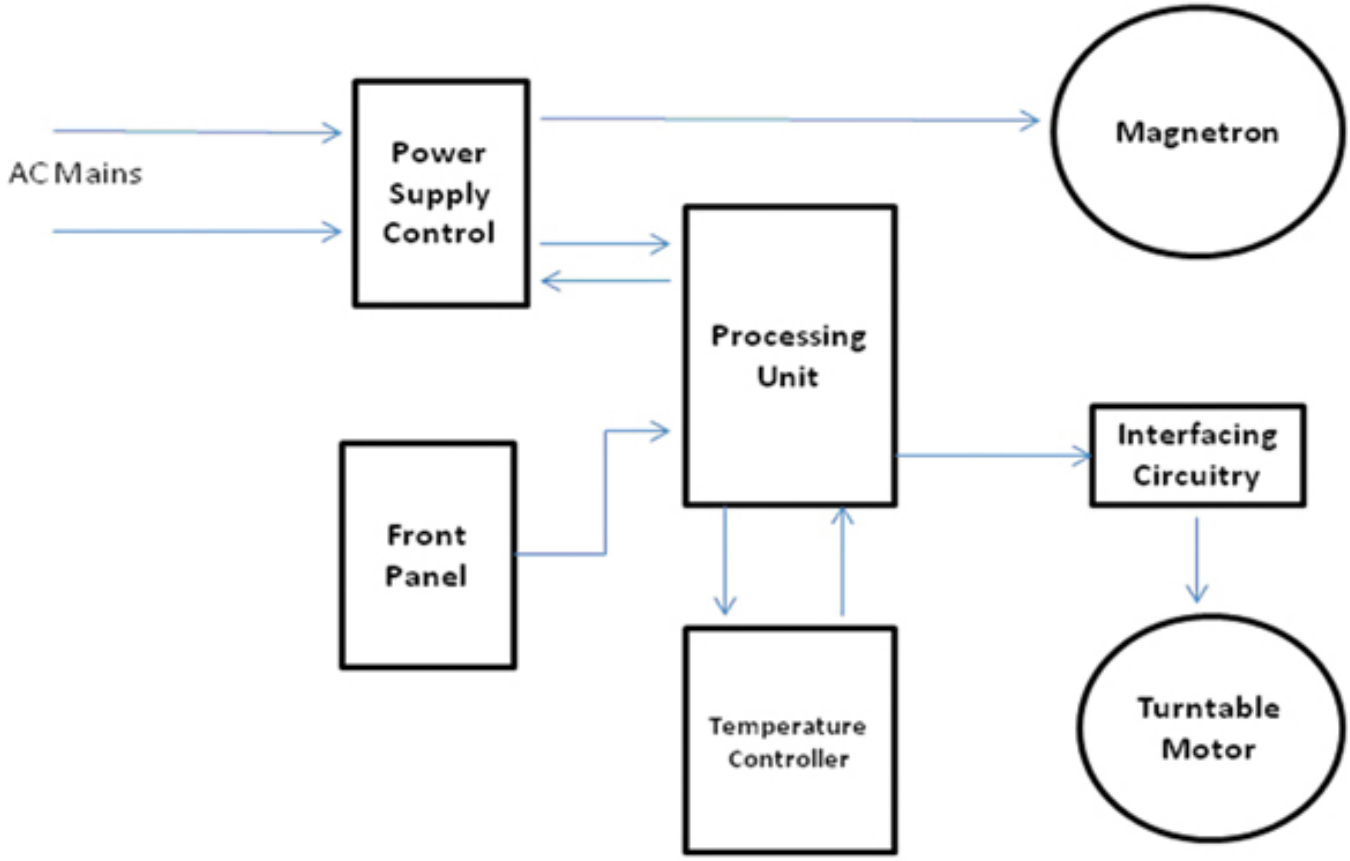

Figure 1: Block Diagram of Microwave Oven

A microwave oven has a host of different control systems, namely the motor control (stirrer, turn-table) front panel, temperature control, and power supply control. In the traditional design, each control system has a different controller associated with it, which communicates with the host processor. With limited board space, it is difficult to fit all of these systems together, thus forcing developers to have to compromise on the functionality of the oven. With the availability of System-on-Chip (SoC) processors, the design cycle has taken a new turn and now the complete system can be built on a single chip instead of one or multiple boards. The unique

integration feature of SoCs provides distinct advantages of reduced board space, flexible design, faster time-to-market and lower system cost. Figure 2 shows an implementation using a SoC where each control system is combined onto a single device.

Temperature and Power Supply Control

One of the most important requirements in a microwave oven is to maintain the temperature within a specified limit. There are numerous ways to measure the temperature, each producing a small change in voltage with respect to temperature. This change ranges from a few microvolts when using a thermocouple to a few milli-volts when using a thermistor. Although the analog blocks (instrumentation amplifier, ADC, etc.) available inside the SoC are not as accurate when compared to expensive analog amplifiers or ADCs available off-the-shelf, comparable accuracy can be achieve through dynamic configurability and programmability.

In Figure 2, the electrical signal generated using the thermocouple is amplified via a programmable gain amplifier (PGA) and is fed into a differential ADC for measurement. These PGAs have higher offset as compared to the one available in the form of a dedicated IC. As stated earlier, the configurable nature of SoCs helps address such differences by employing techniques such as Correlated Double Sampling. In this case, instead of taking one sample per conversion, an extra sample is taken where both of the inputs are connected to a reference source using an input mux. The signal obtained during this phase is subtracted from the sample obtained earlier, thus helping in to get rid of the static or offset introduced by the PGA or ADC. It also removes thermal noise. The input stage of a DeltaSigma ADC, which is shown in the figure, acts as a low pass filter to remove high frequency noise. For a much more accurate measurement, the output of the ADC can be processed using an IIR filter, thus achieving even higher accuracy than that obtained when using a dedicated ADC IC.

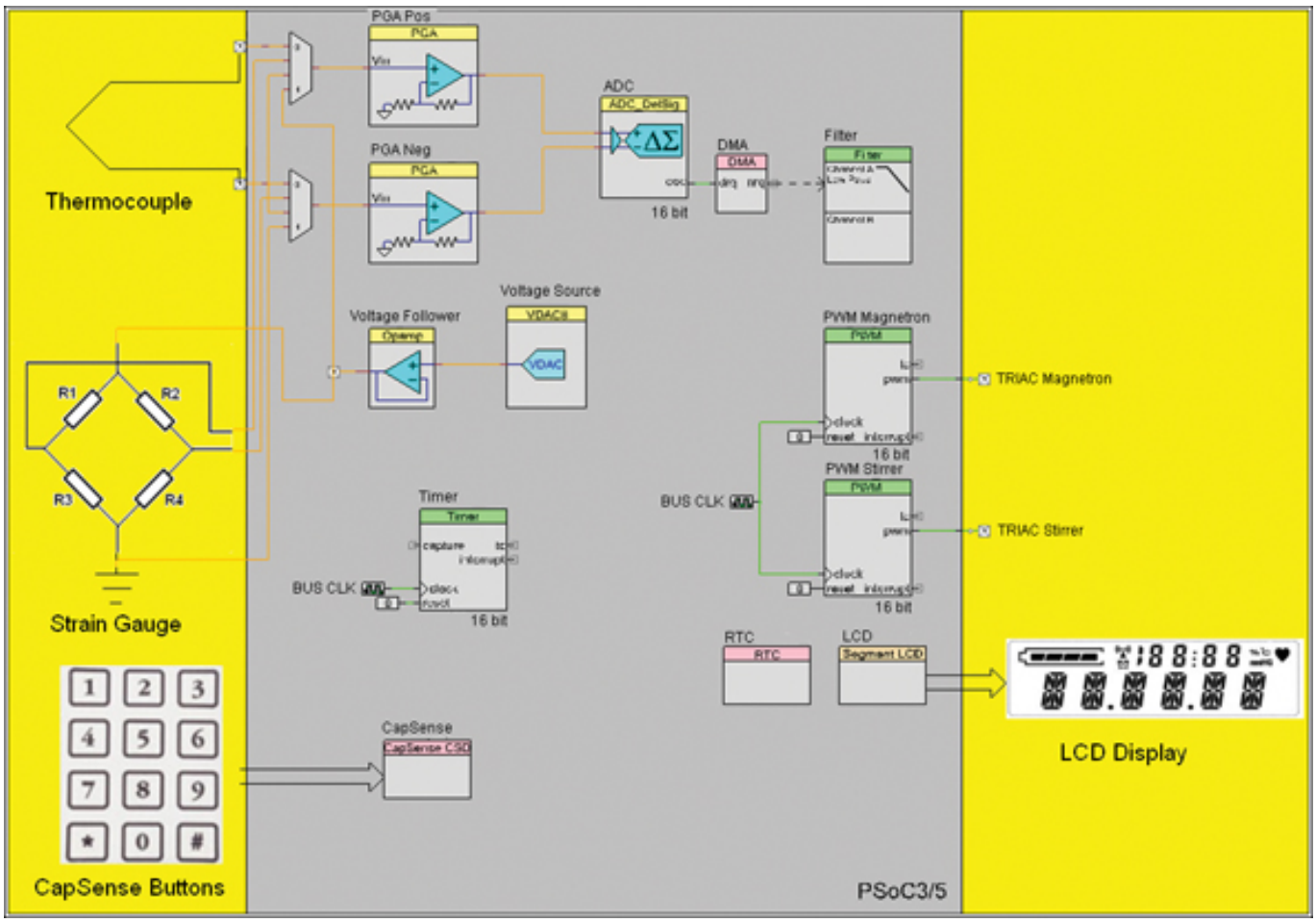

A desirable feature in a microwave oven is the ability to control the power level of the microwave energy produced by the magnetron. The user can choose the power level from one of the options in the Preset Menu. The power level is controlled by modulating the power supply of the magnetron with a variable duty cycle. A pulse width modulated (PWM) signal is used to control the TRIAC or IGBT connected on the primary side of the transformer to control the power delivered to the magnetron. The duty cycle of the PWM signal will determine the amount of time for which full power will be applied to the magnetron.

Weight Sensing and Motor Control

Once a preset cooking option from the menu has been set, a smart microwave oven should be able to calculate the time required to cook the food using a fixed intensity. This can be done by calculating the weight of the food to be cooked using a pressure sensor such as a strain gauge. When food is placed in the oven, these sensors produce a small change in voltage (millivolts), which can be amplified using a PGA and fed to an ADC available with the SoC. (We have already discussed the accuracy of ADCs in a SoC as compared to a dedicated ADC IC.)

Any microwave oven will either have a turntable or a stirrer fan or both to distribute the microwaves generated from the Magnetron evenly throughout the oven. For a microwave oven, the only functionality required is to switch the motor on or off whenever the cook button on the front panel is pressed. This can be done using a simple relay switch. A TRIAC can also be used which can aid in controlling the speed of the motor with the help of PWM pulses generated from the same SoC.

Front Panel and LCD Display

The user interface distinguishes excellent white goods from good white goods. The front panel consists of the switches for the timer, preset cooking menu, and food menus. Since the switches contain movable parts, they are less durable. Using capacitive touch sensing to replace these switches solves this problem and, at the same time, is less expensive to implement. Many intuitive designs utilizing radial sliders and linear sliders for navigating menus, controlling time, and temperature can be easily incorporated into the design. A SoC device that supports touch technology can be used. Once the time is set by pressing certain keys, a programmable timer in the SoC is configured instantly.

Another feature that adds to the aesthetic value of the oven is the LCD display. Many SoCs integrate an LCD driver that can be configured to the appropriate number of segments, refresh rate, and contrast of a specific LCD display. A built-in RTC can be used to keep track of the current time and display it on the LCD.

Control systems are an integral part of any white good, and an SoC like the PSoC 3/5 from Cypress Semiconductor can reduce complexity and component count by integrating these control systems onto a single chip. In this way, designers can implement more functionality in a design while reducing board size, achieving more efficient operation, and lowering system cost.

Source URL (retrieved on *12/22/2013 - 2:06am*):
http://www.ecnmag.com/articles/2011/05/designing-more-efficient-white-goods?qt-most_popular=0