CMOS Digital Isolators Provide Data Protection for Smart Meters

Rudye McGlothlin, Product Manager, Isolation Products, Silicon Labs

The smart meter market is projected to grow by double digits over the next several years as consumers upgrade from traditional electromechanical meters. Smart meters use the latest integrated circuit (IC) technology to accurately measure and report the amount of power consumed. Although smart meters are more sophisticated than electromechanical power meters, a primary concern in smart meter design is measurement data integrity, which can directly impact the utility provider’s billing revenue. One of the most effective solutions for ensuring data integrity in smart meter designs is the use of state-of-the-art digital isolation technology.

Smart power meters use galvanic isolation to protect internal low-voltage integrated circuits, as well as utility service personnel, from exposure to the high-voltage mains. In wired metering applications, such as those deployed in high-density residential complexes, isolation also may be used between the controller and the digital data bus, as shown in Figure 1.

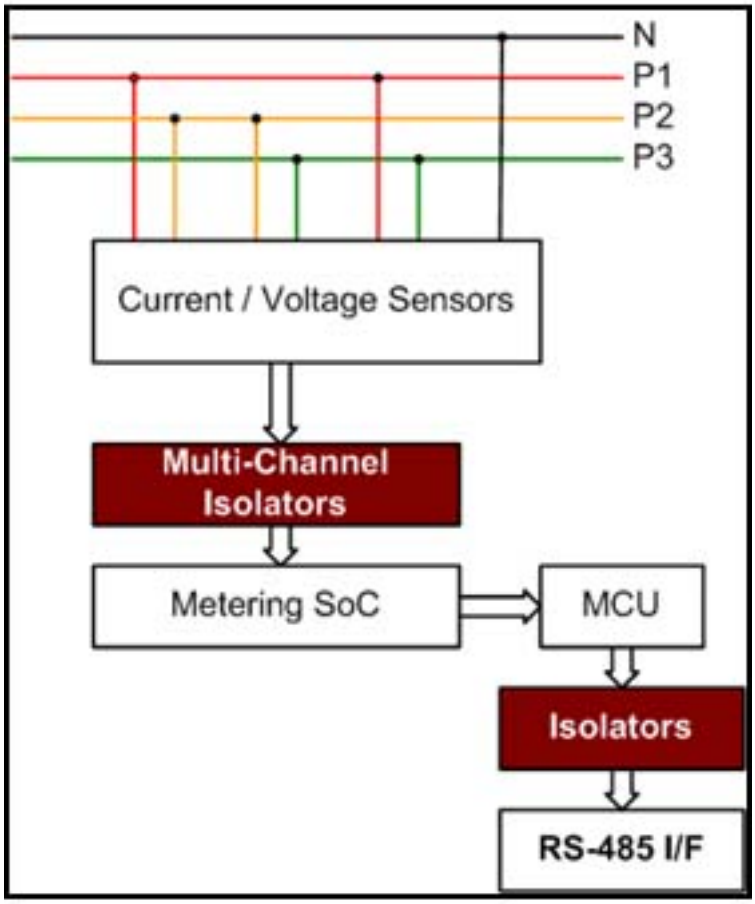

Figure 1: Smart power meter with digital communications bus

Other subsystems, especially those that are exposed to high voltages, also must contain isolation circuitry. For instance, galvanic isolation is necessary between an internal smart meter controller IC and a power line communications (PLC) modem. Signal isolation in these systems may be implemented in a number of ways.

Optocouplers are often used in smart meters for signal isolation, but their usage presents design challenges. The primary drawback is the limited common mode transient immunity (CMTI) of optocouplers. CMTI is a measure of the isolator’s ability to reject fast transient noise signals that are present between the input and the output sides of the isolation barrier. Because of their physical structure, optocouplers tend to have high parasitic input-output capacitance (typically in picofarads). Higher internal parasitic coupling capacitance results in poorer CMTI performance (see Figure 2).

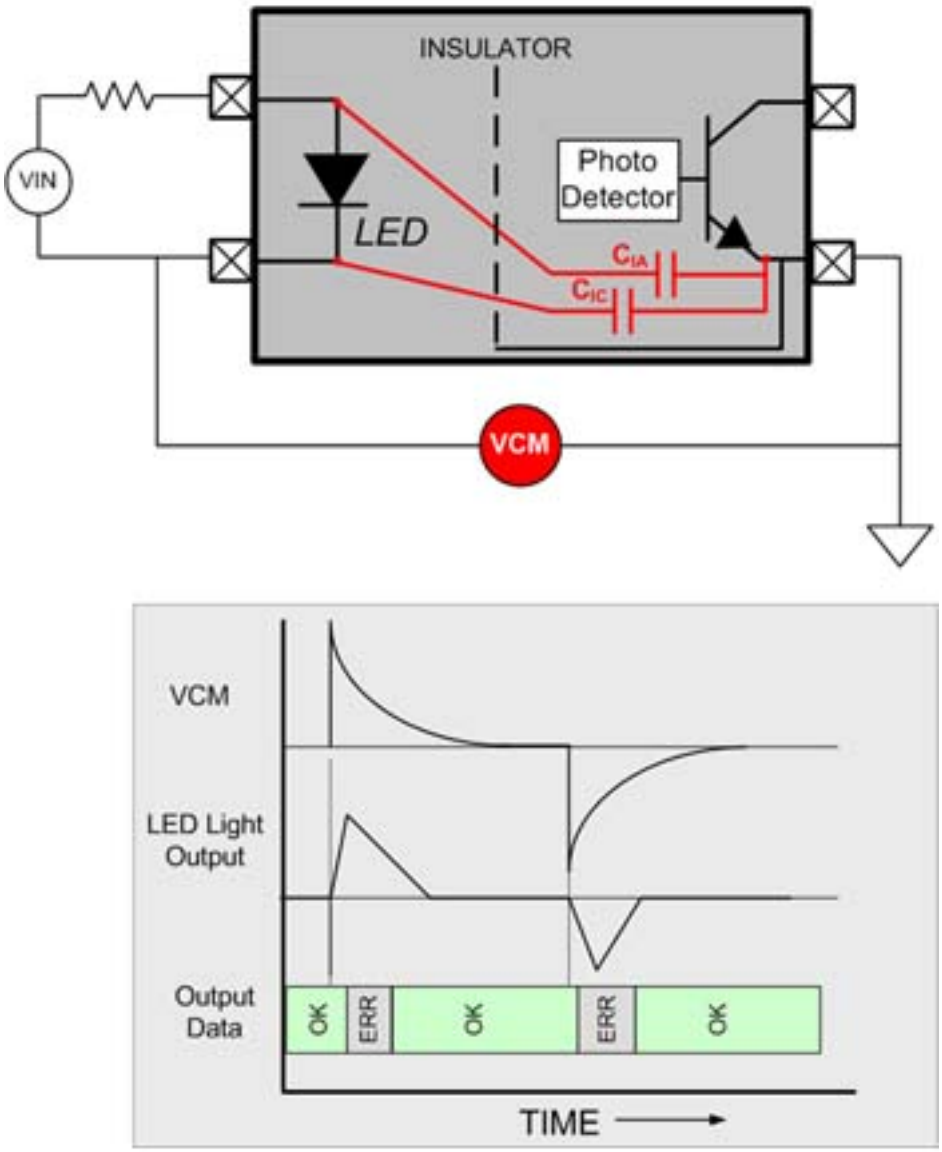

Figure 2: Common mode transients affect the optocoupler signal, causing data errors

Optocoupler suppliers often recommend overdriving the optocoupler's LED to increase noise immunity when on, and reverse-biasing the LED for added immunity when off. These actions increase optocoupler CMTI, but they decrease the device lifetime, which in turn negatively affects system reliability and drives up maintenance costs.

Another isolation solution for smart power meter applications involves the use of an isolation transformer. However, transformers are generally avoided because of their susceptibility to data-corrupting electromagnetic interference (EMI). Pulse transformers multiply this concern because of their inherently wider bandwidth, which is necessary to faithfully convey digital signals.

Electromagnetic (EM) immunity is a primary concern in power meter designs for two reasons. First, there is a high probability that the meter will be installed in an electromagnetically noisy location. Second, some isolation techniques are

potentially the weakest point in the meter system for exploitation. For example, the application of an external field to a transformer-based system can negatively impact data integrity. Indeed, there have been cases of utility customers disabling power meters by attaching strong magnets or coils to the equipment. In either case, the external magnetic field or EM noise will present false measurement data to the controller.

Modern CMOS digital isolators address these concerns in smart meter applications. Compared to optocouplers, CMOS-based digital isolators deliver substantially higher CMTI performance while maintaining higher operating lifetimes and greater reliability. For example, Silicon Labs' Si84xx family of CMOS digital isolators has a typical CMTI specification of 25 kV/µs, and next-generation isolation devices are expected to double this performance level.

CMOS digital isolators are vastly superior to alternative isolation technologies in terms of electromagnetic performance. The Si84xx isolators, for example, exhibit the highest EMI tolerance (>300 V/m E-field immunity, and >1000 A/m magnetic field immunity) of all commercially-available digital isolation devices. These digital isolators achieve this performance by using a differential signal path to transmit data across the isolation barrier. Paired with narrow pass-band filtering, this provides superior common mode noise rejection, as shown in Figure 3.

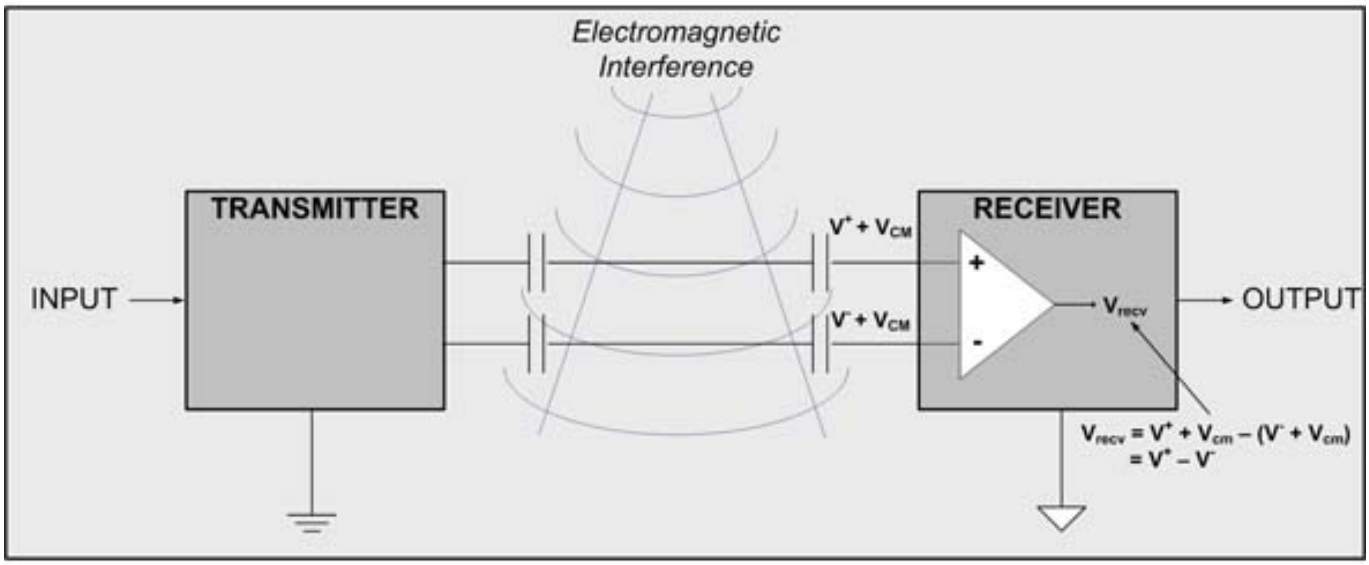

Figure 3: Differential signals and a narrowband receiver reject common mode noise in digital isolators.

In addition, a CMOS-based isolator implementation minimizes device feature sizes, which helps prevent the isolator from acting as an antenna for stray fields. Avoiding the use of transformers enables the system to maintain a high level of magnetic immunity.

As smart meters become prevalent in the market with the worldwide build-out of the smart grid, meter installers will become less discriminating about the environments in which the meters are located, increasing the probability of

measurement data corruption. Any metering component used in the meter design that can be adversely affected by electrical noise or electromagnetic fields must be considered to be a weak link in the overall integrity of the system. These components have the potential to disrupt data to the smart meter controller and ultimately invalidate the utility's billing information.

Despite the popularity of optocouplers and transformers as isolation technologies, both of these solutions have tangible weaknesses that should cause concern for metering applications. CMOS digital isolators offer the optimal isolation solution for smart meters by providing superior immunity to electrical noise and external fields. Using CMOS digital isolators in smart meters ensures that accurate, uncorrupted power measurement data passes across the isolation barrier to the system controller.

Source URL (retrieved on *05/21/2013 - 10:41pm*):
http://www.ecnmag.com/articles/2011/04/cmos-digital-isolators-provide-data-protection-smart-meters?qt-recent_content=0