Integrate Flat Wire Inductors in High Frequency, High Current Designs

Guido Zehnder, Bourns, Inc.

As electronics increasingly become faster and smaller, it is imperative that the components scale appropriately, and inductors are no exception. In order for an inductor to provide a highly conductive solution in the most compact package for high frequency applications, the shape of the wire must be changed from the standard round shape to a flat wire shape. When the inductor wire is altered to a flat wire shape, more efficient current conduction at high frequencies is possible. New flat wire inductor designs are now available offering a vast range of inductance values that meet the requirements for high current, high frequency designs.

This article will provide a technical comparison of round versus flat wire inductors and discuss the benefits of a powdered iron core design. It will examine the energy storage efficiencies due to the shape of flat inductors and how these devices eliminate higher AC resistance for high frequency applications. Finally, the article will outline the applications that are best suited for flat inductors as opposed to round inductors, and the design resources available to help determine the appropriate inductor for a particular design.

Introduction to Inductors
Inductors have been used as energy storage devices in DC to DC conversion circuits for decades. An inductor works in two basic ways: when the switch is turned on, the inductor charges while the current is turned into magnetic flux stored in the component. When the switch is turned off, the magnetic flux collapses and is transformed back to electrical current to provide power to the load. Since the wire conductor in the inductor is in use at all times, an efficient wire is essential in high power and high frequency designs.

Round versus Flat Inductors
Typically, round wire conductors are used in low frequency inductor designs. However, the conductor is subject to the “skin” effect at high frequencies, where electrons travel along the surface area of the conductor rather than through the entire cross section. This results in larger AC resistance in high frequency applications. For DC-DC converters with higher current and frequency requirements, it may be necessary to move to a high current shielded flat wire inductor solution.

As shown in Figure 1 below, the cross-sectional area is the same for both flat and round wired, however the surface area of the flat wire is approximately 60 percent greater. This provides a larger area for the current to flow through to combat the skin effect at frequencies up to 5 MHz for higher inductance values. Higher current values are also possible with flat wire construction.

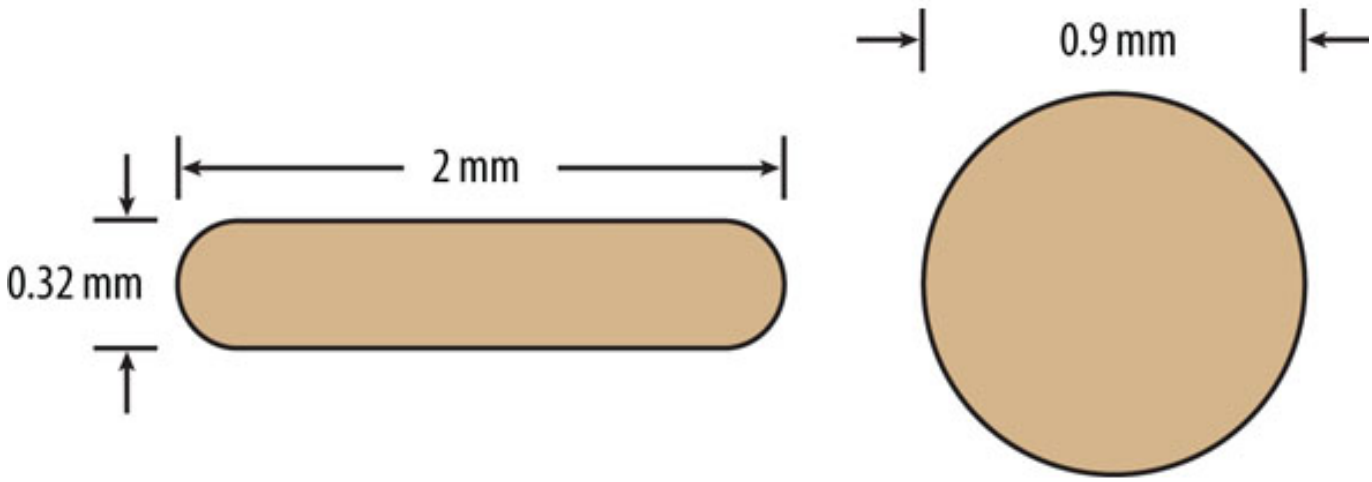

Figure 1. Cross-sectional area and surface area of flat and round conductors

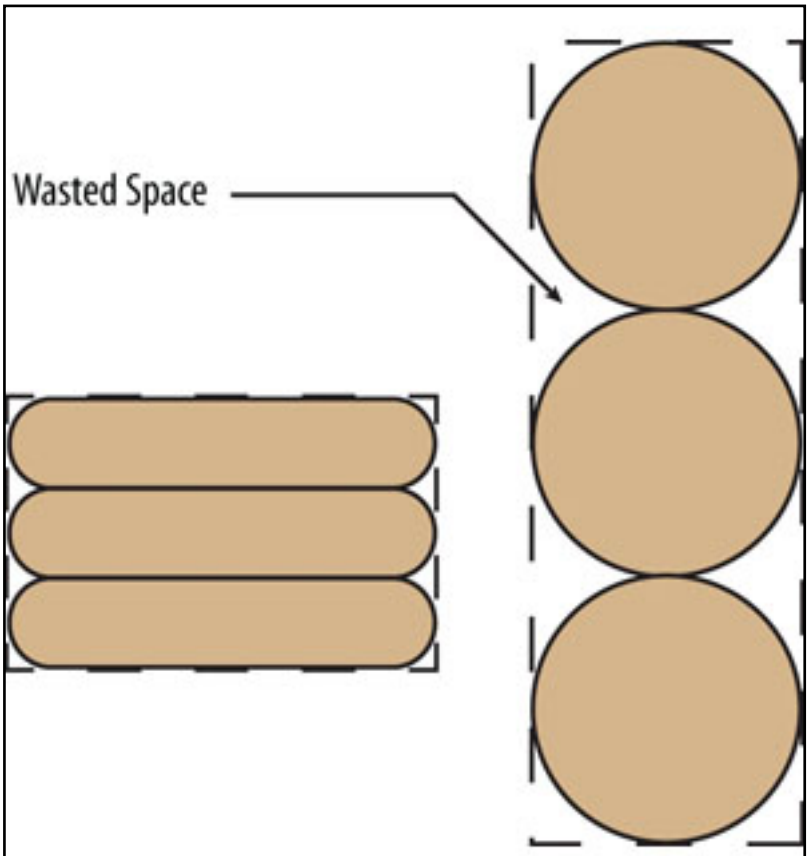

Figure 2. Wasted space in flat and round windings

Designed for Efficiency

Compact designs of flat wire inductors are also designed for efficiency. Flat wire inductors have a high winding factor of approximately 95 percent, with about 5 percent unused space in t he gap between each winding compared to 30 percent unused space in round wire inductors. Figure 2 illustrates the space savings achieved by the high winding factor with minimal wasted space in the flat wire cross-section.

Powdered iron core designs provide additional benefits. Since the powdered iron core is molded directly on the flat wire, the conductivity of the conductor is increased at high-frequency operation and wasted space is eliminated. Whereas in round wire designs, wasted space is prevalent. Figure 3 below shows the cross-section of two inductors and the advantage of saved space around the flat wire design with a powdered iron core.

This technology allows for a smaller package and greater efficiency, with inductance values currently available to 47 µH. Some designs have high saturation currents to 60 A, with values related to the inductance drop. Compact packages are available in footprints as small as 4.8 mm square to 14.8 mm square, and heights from 2 mm to 7 mm. Rated current values, which are based on temperature, are available up to 46 A.

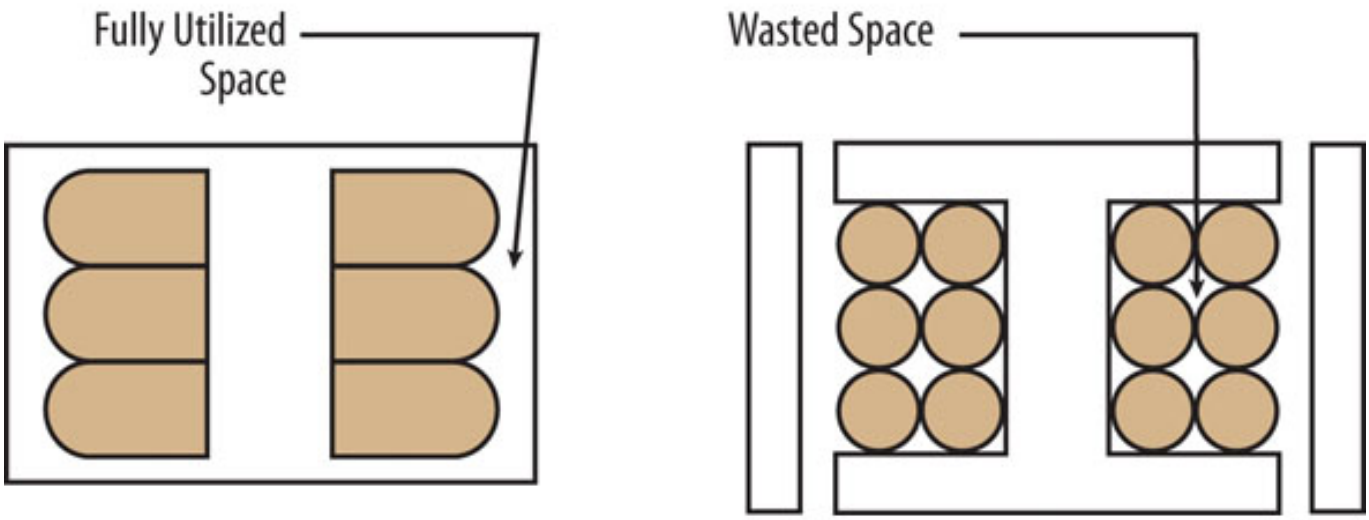

Figure 3. Powdered iron core makes the package efficient.

Design Resources
Selecting the right flat wire inductor will depend on the specification requirements of a particular application, and several resources are available to assist in determining the appropriate part. An example of a DC-DC buck converter circuit is shown below, where L is the inductor.

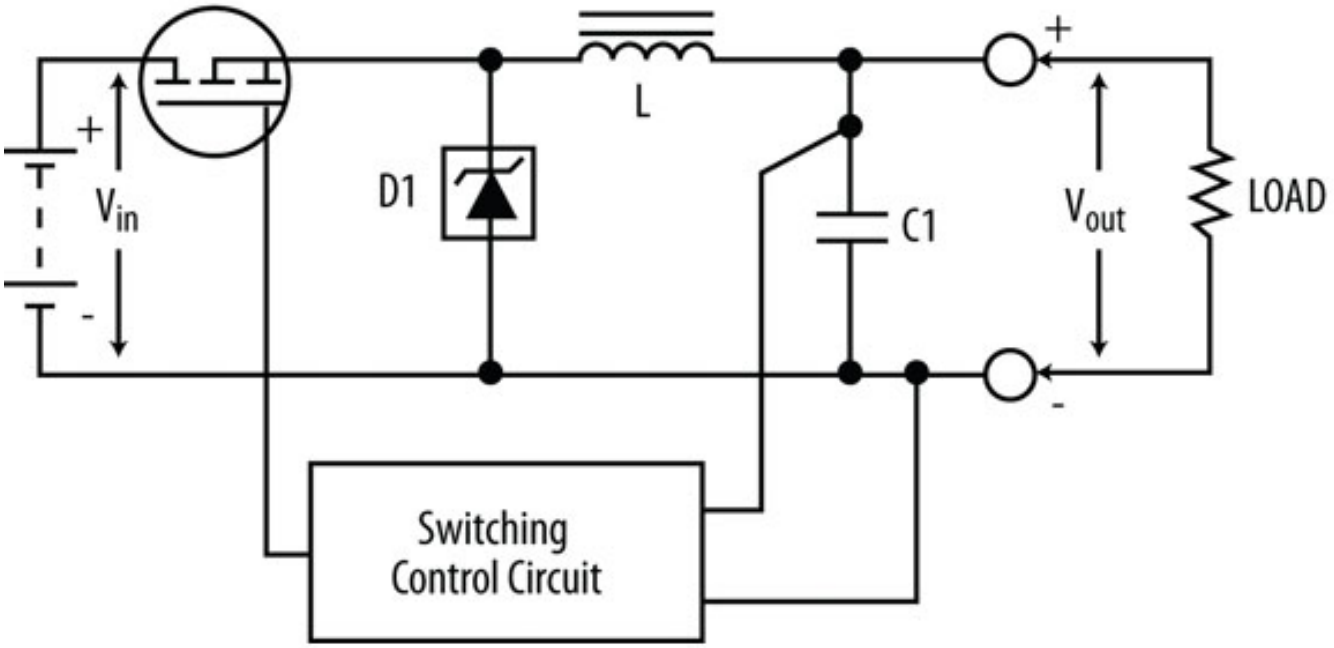

Figure 4. Design example

Online programs for DC-DC converter designs can be found on many switching controller manufacturers' websites, such as Webench® by National Semiconductor Corporation (NS). Designers are prompted for details of the design including the power supply input and output voltages, output current, and efficiency. The program then suggests which NS chipset to use and provides a database of auxiliary components. Texas Instruments (TI) offers SwitcherPro, another online program that includes a database of surface mount inductors to support TI's chipsets in converter designs.

Bourns, Inc. features a parametric search tool at www.bourns.com/ParametricSearch.aspx [1]. Designers are prompted for the inductance and rated current, and then the program suggests a series of components that match the requirements. Datasheets are also available for designers to fine tune the selection of the appropriate inductor for their specific application.

Conclusion

Since applications continue to demand higher current and lower DC resistance, flat wire technology and powdered iron core construction are an optimal solution. The flat wire technology at high frequencies is able to take advantage of its large surface area to create low resistance paths for electrons to flow. These inductors are smaller, more efficient in terms of inductance as current rises, and allow higher inductance values. For more information about inductors from Bourns, visit www.bourns.com/ProductFamily.aspx?name=magnetics [2]

Source URL (retrieved on *12/24/2014 - 10:12pm*):
http://www.ecnmag.com/articles/2011/03/integrate-flat-wire-inductors-high-frequency-high-current-designs?qt-recent_content=0

Links:
[1] http://www.bourns.com/ParametricSearch.aspx
[2] http://www.bourns.com/ProductFamily.aspx?name=magnetics