Energy Harvesting Suits Remote Low-Power Devices

Jon Titus, Senior Technical Editor

Grabbing "free" energy involves more engineering than buying an off-the-shelf transducer.

Contrary to what you might think, the awareness of "green power" didn't spawn the drive to harvest energy. Low-power electronic fabrication technologies did the trick. They cut the power needs of small monitoring devices to the point where energy harvesting has started to make engineering and economic sense.

When engineers start to think about using energy-harvesting techniques to power a device, they must consider the power path. "You have an energy-harvesting device followed by an energy-conversion device, an energy-storage component, and ultra-low-power energy-management circuitry," said Steve Grady, vice president of marketing at Cymbet. "Although there is a lot of talk about 'battery-less' devices, energy-harvesting-based systems still need something to store energy for times when the energy transducer is inactive."

"A piezo-electric device can generate 10's to 100's of Volts while thermo-electric device or small solar panels generate microamps and millivolts," said Adrian Valenzuela, product marketing engineer at Texas Instruments. "So your power-management ICs must work with power across a wide range of currents and voltages. Say you need well-regulated 3-Volt power for an MCU," noted Valenzuela. "For some types of energy storage, you also need a low-power circuit to produce a well-regulated 4.2-Volt output to charge an energy-storage device."

"Energy-harvesting equipment needs an energy-storage device that has a high energy density, small size, and supports thousands of charge/discharge cycles" said Grady. "An energy-storage device also should exhibit a flat voltage profile and very low self discharge."

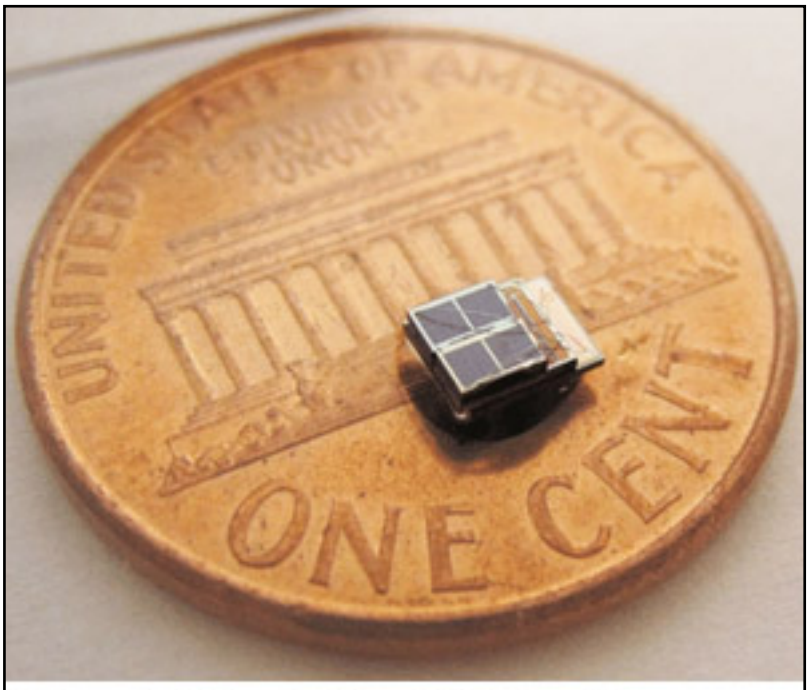

Figure 1. A Cymbet EnerChip placed on a penny shows the relative size of the energy-storage and -management circuits available now for energy-harvesting devices.

Cymbet manufactures rechargeable EnerChip solid-state batteries that offer energy storage in small SMT devices that can go through a reflow oven with other SMT ICs and components. The company's CBC3112, for example, provides a 3.3-V output at 12 uAh with an integrated power-management IC in a 7-by-7-mm SMT package. An EnerChip can go through more than 5000 charge/discharge cycles at a 10-percent depth of discharge.

In addition to figuring out how to gather, manage, and store energy, engineers face another challenge: money. "A battery costs 15 cents, so an energy-harvesting device cannot compete on cost," said TI's Valenzuela. "For now, engineers must work with exotic materials and devices, and they pass their high material costs on to consumers. In the majority of applications where engineers have a technical need for energy-harvested power the final decision almost always rests on the total cost of ownership."

"We also need to teach engineers how to think about power efficiency," noted Valenzuela. "Getting them to write energy-aware software is not easy, particularly when their application includes a wireless link. A wireless transceiver requires several orders of magnitude higher power than an MCU. So you must know how to compress data so it takes less time to transmit. And you must choose an antenna that produces the most efficient wireless signal for your equipment."

"We put a lot of effort into 'low-power firmware,' for a solar-energy-harvesting kit we created with Microchip," said Steve Grady of Cymbet. "When a harvester generates only a few microwatts or milliwatts, every Joule is precious. Inefficient use of a wireless transmitter at system start-up, for example, could completely drain the power source as a node searches for other wireless devices."

"We always have to coach our customers interested in energy harvesting about changing some of their code," continued Grady. "They just want to replace their existing power source with an energy-harvesting device, but that approach won't work. Sometimes success of a product depends as much on optimized firmware as on the harvesting device, energy storage and power-management circuitry."

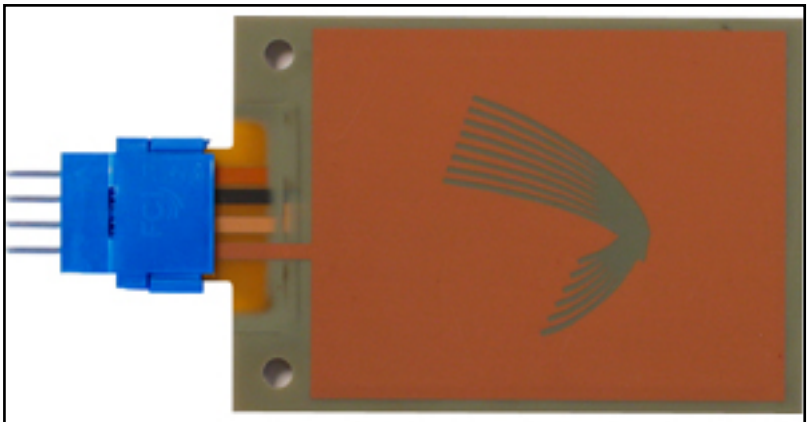

Figure 2. This image from Midé shows a "raw" Volture energy harvester engineers can use in a prototype or in an end product to convert vibrations into electrical energy. In this form, the harvester does not include any power-management circuits or energy-storage capability.

Today the market for energy-harvesting devices seems a mile wide and an inch deep. "Every application is different," said Chris Ludlow, director of mechanical engineering, at Midé, a manufacturer of piezo-electric energy harvesters and electronics. "There's no silver-bullet product we can make to sell to 1000 customers. Vibration-type energy harvesters for devices on the the Golden Gate Bridge in San Francisco won't be the same as those for the Zakim Bridge in Boston because they have different vibration characteristics. We couldn't make a single product that would work on every bridge."

Don't feel discouraged by the challenges of harnessing "free" energy. Companies have created interesting and innovative harvesting technologies, power-management ICs, energy-storage devices, as well as low-power MCUs and wireless transceivers.

Midé, for example, sells a line of standard harvesters that pick up vibrational energy with a piezo-electric transducer and convert it to electric power. "Piezos are brittle materials and they generally don't do well in harsh environments," said Ludlow. "But our packaging process protects the piezos and makes them easy to connect so you can put them into a product and have a reliable energy source."

"Many industries employ AC motors that create vibrations between about 50 Hz and 240 Hz, so you could use a standard piezo harvester on a motor to gather energy,"

noted Ludlow. "Then your device could report motor conditions to other equipment. Our main focus is on helicopters or rotary-wing aircraft where the vibration frequency range goes from about 10 Hz to 40 Hz. We also create under-train railway devices that operate in the 100-Hz range."

As Ludlow noted earlier, no one vibration harvester fills all needs. To help engineers understand vibration frequencies available on site, Midé created the SlamStick, a rechargeable USB-stick data logger that measures acceleration in all three axes. Configuration software lets users tailor the device to their specific needs. "Within 60 seconds we can characterize the vibration profile of a pump, for example, to find the best frequency for energy harvesting," said Ludlow. "That's the first type of analysis engineers should do for a vibration energy-harvesting application."

Figure 3. This photo shows a MicroStrain energy-harvesting pitch-link node installed on an Sikorsky MH-60S used for flight testing. The US Navy installed a connector on the pitch link to let people collect slip-ring data from a separate, hard-wired strain gauge as they also collected data from a MicroStrain wireless pitch-link load sensor.

MicroStrain also produces piezo-electric energy-harvesting devices for use in helicopters. "We're now involved with flight tests on MH-60S Navy Sea Hawk and UH-60A Army Black Hawk helicopters and V-22 Osprey tilt-rotor aircraft," said company President, Steve Arms. "Our harvesters convert the operational strains and vibrations of a helicopter into power that lets us monitor loads on rotating components. And we transmit the loads' information in real time."

"You might be surprised at the energy available in a device where you didn't think it existed, particularly at higher frequencies," noted Arms. In helicopter gearboxes, for example, we see a small displacement but because it shakes at such high frequencies, we can get a lot of energy. Even though the gearbox doesn't feel like it moves much, it is a rich environment for energy harvesting."

MicroStrain makes a product that can help engineers explore energy harvesting. The EH-Link Energy Harvesting Wireless Node lets people use piezo-electric, inductive, electromagnetic-field, solar, thermoelectric and other harvesting devices as power sources. The module includes an embedded triaxial accelerometer, relative-humidity and temperature sensor, and a single-channel differential input for an external sensor. Communications use a standard IEEE 802.15.4 transceiver.

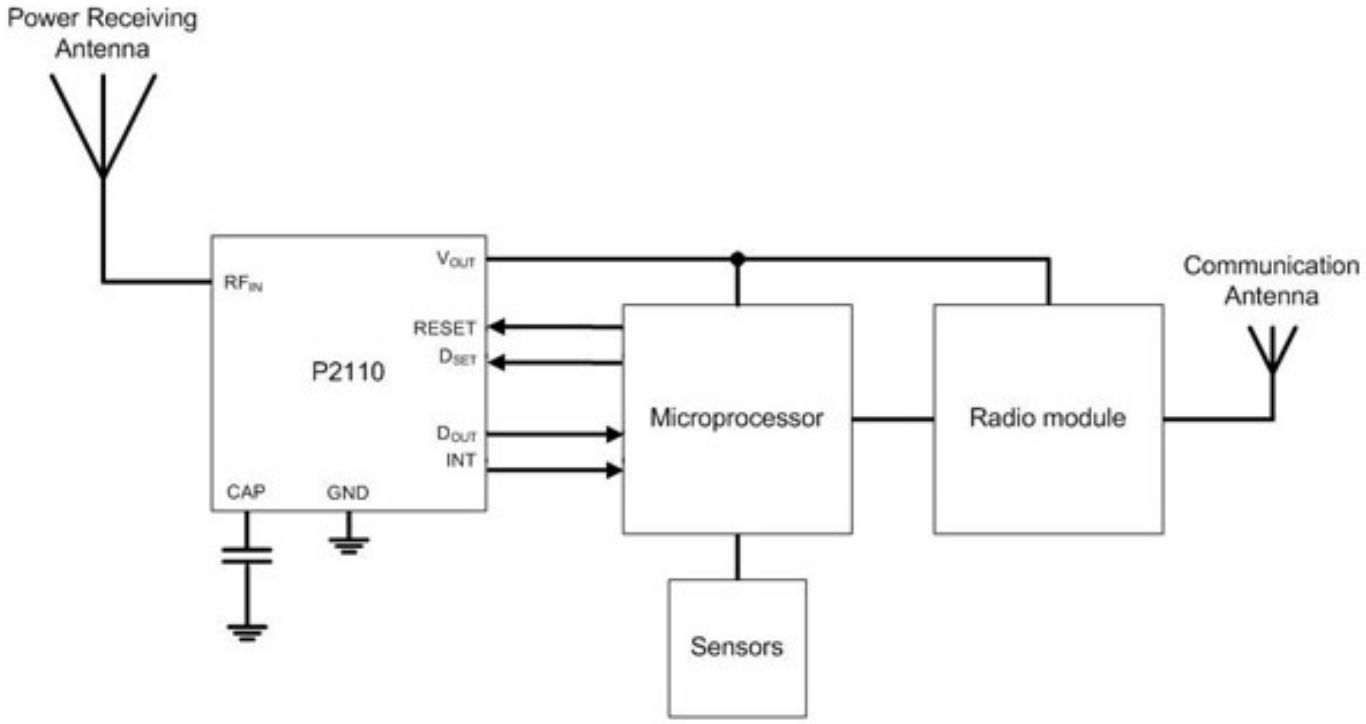

Figure 4. This block diagram shows the Powercast P2110 Powerharvester receiver IC provides RF energy harvesting and power management for battery-free, micro-power devices. A microprocessor can communicate with a P2110 and help improve system efficiency.

Not all energy you harvest comes from "free" vibrations, temperature differences, or sunlight. Sometimes you must pay a little extra to create the energy in the first place. Powercast takes that approach with its radio-frequency energy-harvesting devices, the P1110 and P2110 receivers that operate between 850 MHz and 950 MHz.

The wireless-harvesting technology provides controllable and reliable power that doesn't rely on intermittent sources. "You can turn on a Powercaster transmitter and provide power for as long as needed," said Harry Ostaffe, vice president of marketing and business development at Powercast. "Once charged, the receiver nodes can transmit their data or send a message to say 'Turn off the power, we're fully charged.'" The TX91501 transmitter produces a 3-Watt output effective isotropic radiated power (EIRP) at 915 MHz and the companion receivers can pick up that energy from 40 to 50 feet (12 to 15 m) away.

"Along with power, the transmitter sends fixed data such as an identification code," noted Ostaffe. "And an MCU at the receiver could interpret that data for device authentication and location tracking. The data could also provide timestamps for

remote devices that lack a real-time clock."

"Adopting the Microchip MiWi protocol let us use less power for each data transmission so the sensor node can operate more frequently while still maintaining its energy balance," said Ostaffe. "That's a benefit for a control application such as an HVAC system. And because RF power is available at all times and the receiver needs no battery, people can place sensors between walls and in toxic or dirty areas where there is no wind or light, or that would be inaccessible or dangerous for battery replacement."

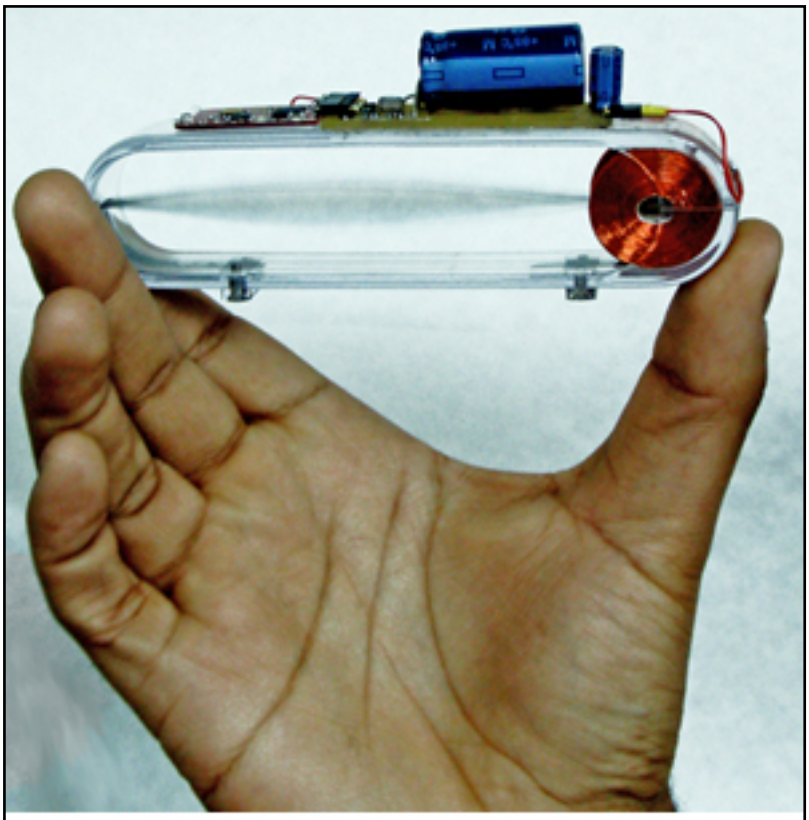

Figure 5. The tensioned membrane in this prototype from Humdinger Wind Energy moves a magnetic field through coils to create energy from wind at speeds of 6 meters/sec. or greater.

Some energy-harvesting devices show promise but haven't yet found a large market. Look, for example, at the approach taken by Humdinger Wind Energy. The company invented the Windbelt technology that harnesses wind energy in devices that can range from palm-size up to several meters across.

"We use a tensioned membrane that has magnets mounted on it," said Shawn Frayne, Humdinger's president and co-founder. "As air flows across the membrane it undergoes aeroelastic flutter. It's the same effect that ripped apart the Tacoma Narrows Bridge in 1940. When the membrane reaches a limit--a stable positive-feedback loop between competing lift and tension forces in the structure--we can extract power from a coil as the magnets change the field through it. With a wind speed of six meters per second (about 13 or 14 miles per hour), we can obtain from a milliwatt up to several milliwatts in a pack-of-gum sized system.

According to Frayne, Humdinger makes custom units for people who want to explore energy harvesting on different scales; however the technology is still very much "in the lab." But Frayne sees many potential uses wherever people have enough fluid flow they can tap for energy.

From the business direction, Frayne seeks to work with partners who can create complete products. "I don't see a situation where someone buys a wireless sensor node from Company A and then says, 'Let's power this with a windbelt.' They probably want to buy a little block that has all the wireless sensors and includes a windbelt."

"There's always interest in energy harvesting," said Frayne. "Everyone's just waiting for the market to blossom."

For more information:

Cymbet: www.cymbet.com [1].

Humdinger: www.humdingerwind.com [2].

MicroStrain: www.MicroStrain.com/eh-link.aspx [3].

Midé: www.mide.com/products/volture/volture_catalog.php [4].

Powercast: www.powercastco.com [5].

Microchip: www.microchip.com/stellent/idcplg?IdcService=SS_GET_PAGE&nodeId=2042&param=en551270 [6].

Texas Instruments: www.ti.com/ww/en/apps/energy-harvesting/index.shtml [7].

Figure captions

Figure 1. A Cymbet EnerChip placed on a penny shows the relative size of the energy-storage and -management circuits available now for energy-harvesting devices.

///Images in file: 02ECN-Titus ES EH Fig 1.jpg///

Figure 2. This block diagram shows the Powercast P2110 Powerharvester receiver IC provides RF energy harvesting and power management for battery-free, micro-power devices. A microprocessor can communicate with a P2110 and help improve system efficiency.

Figure 3. This Texas Instruments MSP430 Solar Energy Harvesting Development Tool (EZ430-RF2500-SEH) uses a high-efficiency solar panel (2.25-by-2.25 in; 4.8-by-4.8 cm) optimized for indoor low-intensity fluorescent lights. The wireless-sensor system manages and stores energy in a pair of thin-film rechargeable EnerChips from Cymbet.

Figure 4. The tensioned membrane in this prototype from Humdinger Wind Energy moves a magnetic field through coils to create energy from wind at speeds of 6 meters/sec. or greater.

Figure 5. This photo shows a MicroStrain energy-harvesting pitch-link node installed on an Sikorsky MH-60S used for flight testing. The US Navy installed a connector on the pitch link to let people collect slip-ring data from a separate, hard-wired strain gauge as they also collected data from a MicroStrain wireless pitch-link load sensor.

Figure 6. The SlamStick portable and rechargeable vibration recorder from Midé measures acceleration in all three axes. The device uses a USB port to download data and to configure and charge the "stick." The vibration data helps equipment designers characterizes a vibration profile for energy-harvesting devices.

Figure 7. This image from Midé shows a "raw" Volture energy harvester engineers can use in a prototype or in an end product to convert vibrations into electrical energy. In this form, the harvester does not include any power-management circuits or energy-storage capability.

Source URL (retrieved on *12/10/2013 - 2:33am*):
http://www.ecnmag.com/articles/2011/02/energy-harvesting-suits-remote-low-power-devices?qt-recent_content=0

Links:
[1] http://www.cymbet.com
[2] http://www.humdingerwind.com
[3] http://www.MicroStrain.com/eh-link.aspx
[4] http://www.mide.com/products/volture/volture_catalog.php
[5] http://www.powercastco.com
[6] http://www.microchip.com/stellent/idcplg?IdcService=SS_GET_PAGE&nodeId=2042&param=en551270
[7] http://www.ti.com/ww/en/apps/energy-harvesting/index.shtml