Power Module Designs Aim for Efficiency, Heat Management, and Flexibility

Joe Sullivan, Product Marketing Manager, Vicor Corporation

As electronic systems continue the trend toward lower voltages and higher currents and as the speed of contemporary loads ? such as state-of-the-art processors and memory ? continues to increase, the power systems designer is challenged to provide small, cost effective, and efficient power system solutions that offer the requisite performance.

Power module designs aim for high power density and efficiency, heat management, and flexibility, but as always, the application rules, and the full toolbox of power design strategies is often likely to be needed. Such design strategies encompass not only those related to the product, but to the topologies and architectures as well.

Historically, a variety of power system architectures have been and are still being used.

The classic centralized power architecture (CPA), which is simple and cost effective, continues to be applied wherever it is appropriate. CPA contains the entire power supply in one housing. It converts the line voltage to the number of DC voltages needed in the system and buses each to the appropriate load. Thermal management can be a special challenge with centralized architecture because the heat is all in one concentrated area. Large heat sinks and fans are often needed to prevent the power supply from overheating. System hot spots are a source of reduced reliability. CPA is inherently inflexible.

The high-density DC-DC converter was the enabling technology for distributed power architecture, which, in turn, enabled the busing of higher voltages and lower currents, to be converted at the load to a lower voltage at higher currents. This approach improved overall system efficiency by minimizing I2R losses and overall system thermal management, because the power converters were spread throughout the system. Large conductors carrying lots of current back to the power source were eliminated, which eliminated noise and crosstalk potential. DC-DC converters, of course, provide isolation from the input to the output, transformation

of the voltage, and regulation. As the power environment changed, with many systems requiring many different voltages, conventional DC-DC converters ? saddled with all the functions of isolation, transformation, and regulation ? developed a cost disadvantage.

Intermediate bus architecture, like the distributed bus, uses a front-end box that converts the incoming AC to a single bus voltage. However, instead of being fed directly to the point-of-load (POL) converters, this bus voltage is converted to a lower, unregulated intermediate bus voltage, which then feed non-isolated and relatively inexpensive POL converters. The intermediate bus architecture, however, involves another power processing stage, causing additional conversion efficiency losses.

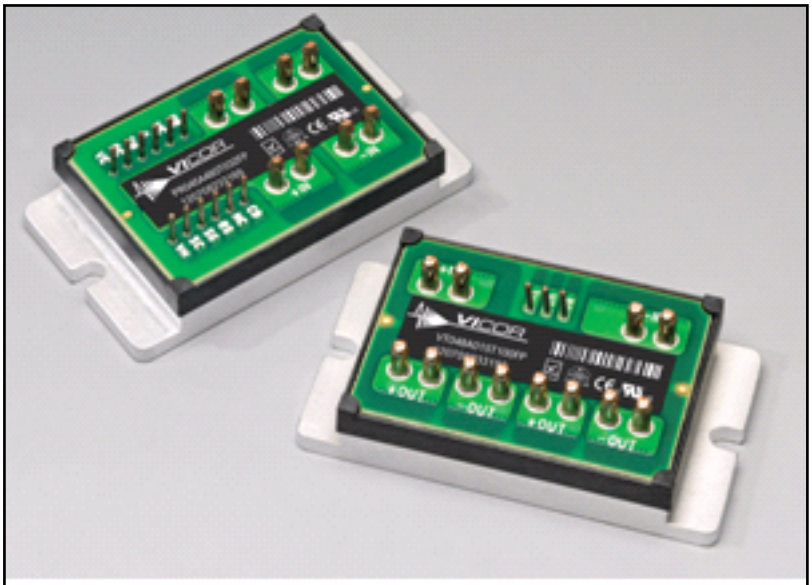

Figure 1. VI BRICK regulation and transformation modules utilize the technical advantages of Factorized Power including high density and efficiency, low noise operation, fast transient response, and elimination of bulk capacitance at the point of load (POL). The rugged aluminum baseplate enclosure and through-hole pin connection provide a simplified platform for mounting and thermal management.

Power module designs must be efficient to begin with and sufficiently flexible to manage the generated heat effectively. These dual requirements are met by Factorized Power Architecture (FPA), which breaks power conversion into flexible and scaleable power building blocks. One is a current multiplier chip that provides transformation and isolation. Another chip provides a regulated non-isolated output voltage – a ‘factorized bus’ – from an unregulated input source. These chips can typically exceed 96% efficiency depending upon input and output voltages.

An even more flexible way of using these chips is packaging them in small brick-like

formats with flange-base plates, aluminum case, making the removal of heat even simpler. The chips themselves are surface-mountable, but the baseplate packaging can be typical through-hole mount that’s compatible with lead-free, RoHS compliant soldering processes. It’s another tool in the designer’s kit to give them the answers they need for their own systems. These components can be mounted, attached to cold plates, very rugged type of mounting schemes with standoffs for withstanding severe environments, vibration.

Depending on the requirements for voltage regulation, load current, system cost, and other factors, the two brick modules facilitate a range of design configurations that include multiple outputs, high power arrays, high-current/low voltage, high voltage, and separation of regulation and transformation for optimal board space utilization and thermal management. One brick, the voltage transformation module (VTM) is a current multiplier and provides voltage transformation and isolation, and the other, the regulator module (PRM), provides regulation. Both are shown in Figure 1.

Figure 2 shows a few of the ways designers can use these bricks. The simplest configuration of the regulator module and current multiplier, as shown in Figure 2(a), provides DC-DC conversion with the current multiplier providing isolation and transformation at the point of load. The PRM, which can be collocated with the VTM or be located a distance away from the VTM, provides regulation. In a variation of this simplest configuration, shown in Figure 2(b), the output voltage of the VTM can be controlled with a choice of methods. The local-loop control method, connected to A, regulates the Factorized Bus voltage. The adaptive-loop control method, connected to B, improves regulation to within 1%. The remote-loop control method, connected to C, improves regulation to within 0.2%.

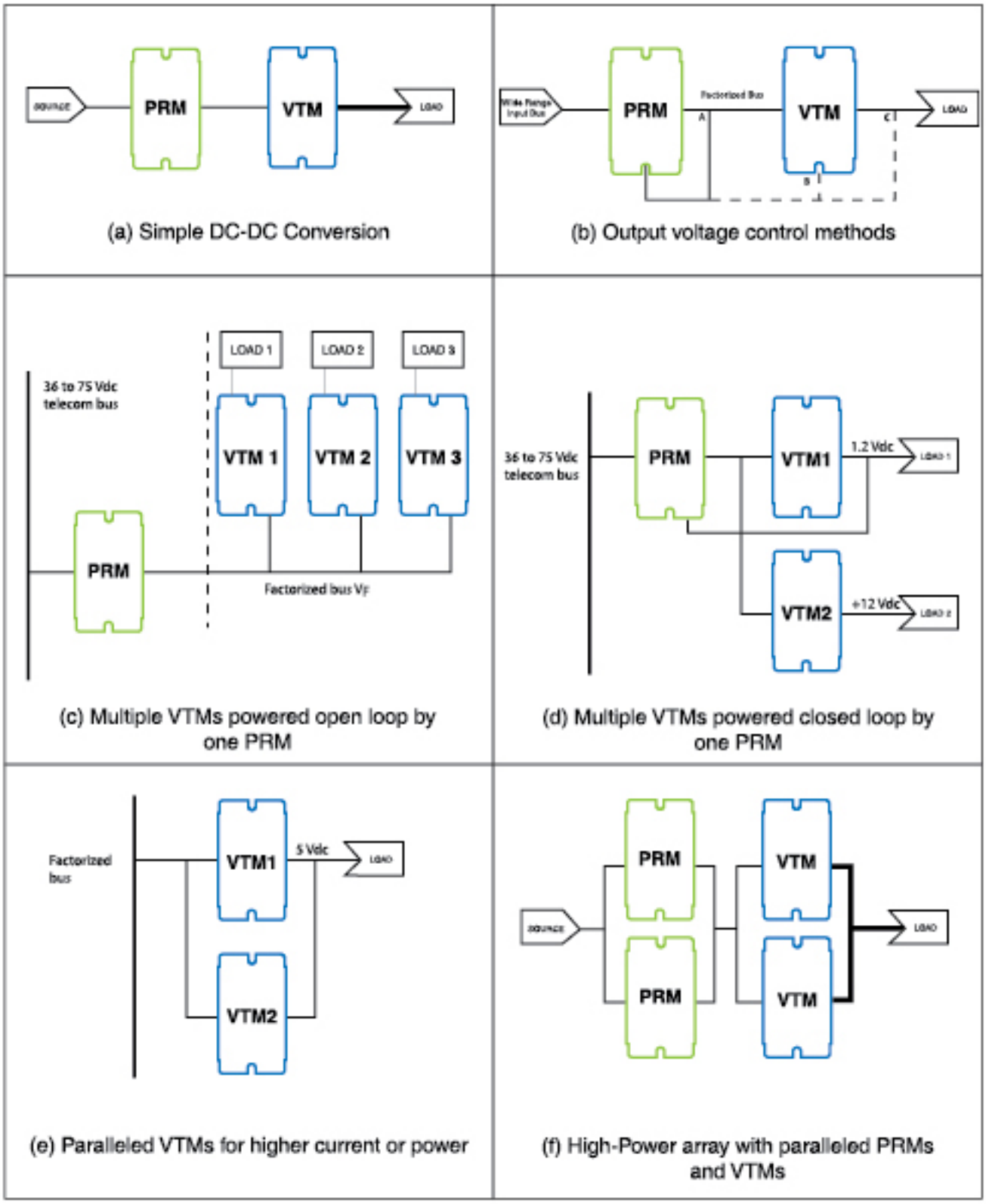

Figure 2. A few of the ways designers can use the bricks.

In another configuration, Figure 2c shows a low-cost, high-density power system that uses one PRM to power multiple VTMs in open loop to generate multiple supply voltages. It’s also possible to operate one of the VTMs closed loop, as shown in Figure 2(d), with the PRM for the tightest voltage regulation at that load. The voltage regulation of the other VTMs will follow that of the VTM operating closed

loop.

As shown in Figure 2e, VTMs can be can be paralleled for applications requiring higher current or power. Likewise, PRMs can be paralleled, as with VTMs in Figure 2f, to create high-power arrays, such as multi-kilowatt power systems.

Source URL (retrieved on *05/20/2013 - 4:47am*):
http://www.ecnmag.com/articles/2011/01/power-module-designs-aim-efficiency-heat-management-and-flexibility