Choose a Charger IC for Single-Cell Li-Ion Battery Applications

William Hadden, Texas Instruments, www.ti.com

There are many options for single-cell Lithium-Ion (Li-Ion) battery chargers. With the portfolio of handheld devices growing every year, so do the requirements for the battery charger. Several factors must be weighed in order to select the correct integrated circuit (IC) for the job. Factors such as solution size, USB compliance, charge rate, and cost must be examined before the design begins. These factors must be ranked by importance and the charger IC selected accordingly. In this article, we examine the different charging topology and look at some of the features available in battery charger ICs. We also examine several applications and present solutions.

The Li-Ion Charge Cycle

Li-Ion batteries require a specialized charge cycle for safe charging and to maximize the lifetime of the cell. The battery is charged in two stages: constant current (CC), and constant voltage (CV). When the battery is below the full charge voltage, the current is regulated into the battery. In CC mode, the current is regulated to one of two values. If the battery voltage is very low, the charge current is reduced to a pre-charge level to condition the cell and prevent cell damage. This threshold differs with chemistry and is typically determined by the cell manufacturer. Once the cell voltage rises above the pre-charge threshold, the charge increases to the fast charge current level. The maximum suggested fast charge current for typical cells is 1C (C = current it takes to drain the battery in one hour), but this current is also determined by the battery cell manufacturer. The typical charge current is ~0.8C in order to maximize the lifetime of the cell. As the battery is charged, the voltage rises. Once the cell voltage rises to the regulation voltage (typically 4.2 V), the charge current tapers down and the cell voltage is regulated in order to prevent overcharge. In this mode, the current tapers off as the cell is charged and the battery impedance reduces. Once the current drops to a predetermined level (typically 10 percent of the fast charge current), the charge is terminated. Li-Ion batteries are not typically float-charged because it reduces the lifetime of the cell. Figure 1 graphically shows a typical charge cycle.

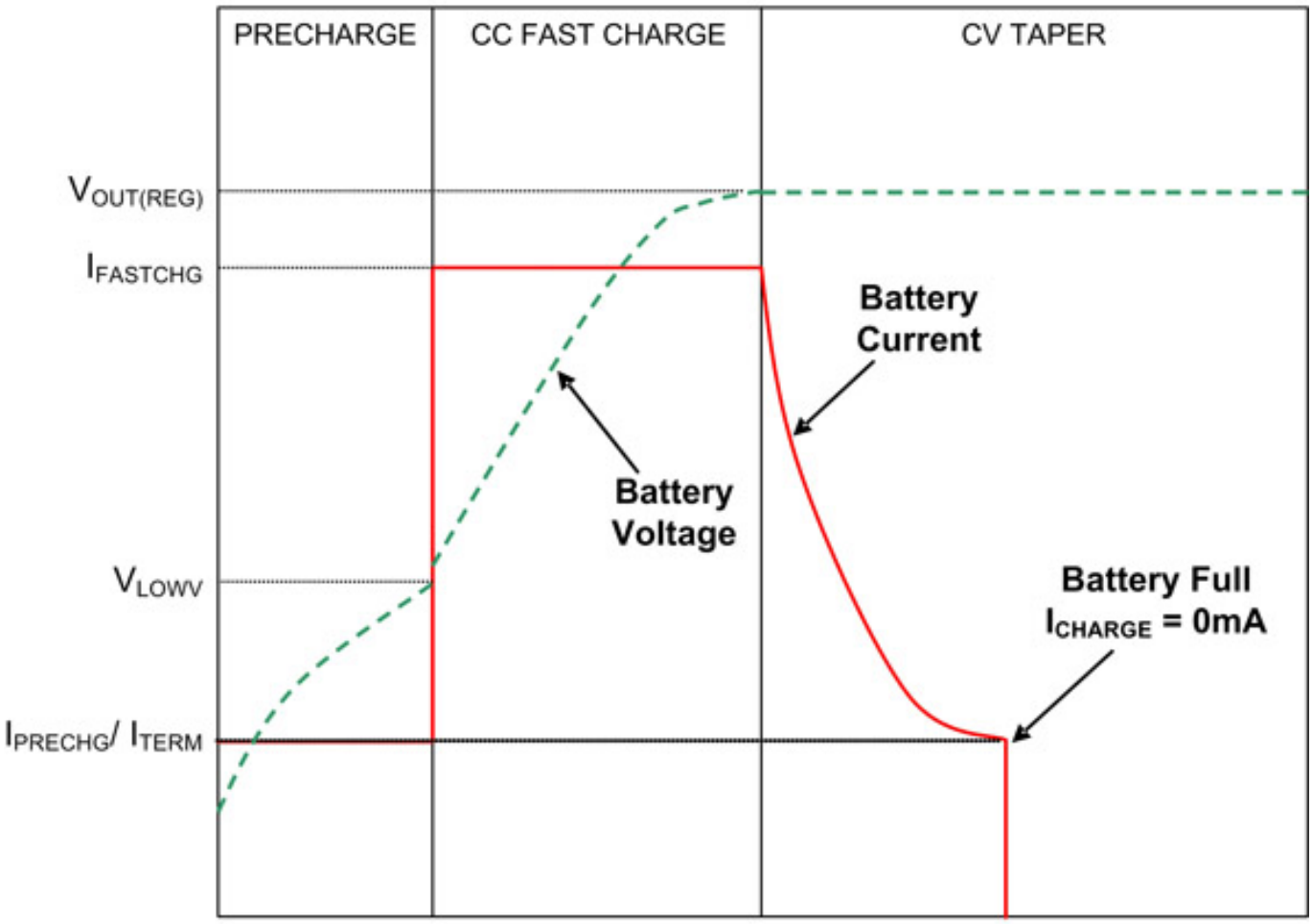

Figure 1. A typical Li-Ion charge cycle.

Linear Versus Switch-mode Solution

There are two different topologies used to convert the adapter voltage down to the cell voltage and control the different charging phases: linear regulators, and inductive switchers. Both topologies have benefits and drawbacks in size, efficiency, solution cost and electromagnetic interference (EMI) radiation. Here are the benefits and tradeoffs for both topologies.

Inductive switchers are usually the best choice for highest efficiency. The charge current is sensed on the output using a sense element such as a resistor. The current feedback controls the duty cycle when the charger is in CC mode. The battery voltage sense feedback controls the duty cycle when in CV mode. Depending on the feature set, other control loops may be present. We will discuss these loops further later on. The inductive switcher circuits require a switching element, rectifier, inductor and input and output capacitors. For many applications, the solution size can be reduced by choosing a device where the switching element and rectifier are internal to the IC. These circuits have typical efficiencies ranging from 80 to 96 percent depending on the load. Switching converters usually require more space due to the size of the inductor and are generally more expensive. The switching converter also causes EMI radiation from the inductor and noise on the output due to the switching.

Linear chargers step down DC voltages by dropping the input voltage across a pass

element. The benefit here is that the solution requires only three parts: pass element and input/output capacitors. Linear dropout regulators (LDOs) are usually a cheaper solution and are much less noisy than inductive switchers. The charge current is controlled by regulating the resistance of the pass element to limit the current into the battery. The current feedback is usually taken from the input of the charger IC. The battery voltage is sensed to provide the CV feedback. The resistance of the pass element changes to maintain either a constant current into the input of the IC or a constant battery voltage. The input current to the device is equal to the load current. This means that the efficiency of the solution is equal to the output to input voltage ratio. The drawback to the LDO solution is the low efficiency for high input to output voltage ratios (i.e., low battery situations). All of the power is dissipated by the pass element which means that an LDO is not an ideal solution for high-charge current applications where the input-to-output difference is large. These high-power applications require heatsinking, which increases the solution size.

Calculating Power Dissipation and Heat Rise

$$P_{LOSS} = P_{IN} - P_{OUT} = P_{OUT} \times (\frac{1}{\eta} - 1)$$

Where ? is the efficiency of the charger and $P_{OUT} = V_{OUT} \times I_{OUT}$. The temperature rise due to the power dissipated can be calculated using thermal resistance. The thermal resistance is different for every application and depends on parameters such as board layout, airflow, and package to name a few. The thermal resistance should be modeled for the end-application board. Keep in mind that $?_{JA}$ defined in the datasheet is not a good representation of the thermal resistance for the application [1].

What Topology Should be Used?

The first parameter to examine is the charge current. For small applications, such as Bluetooth headsets where the charge current is between 25 mA and 150 mA, the best solution is almost always a linear charger. These applications are usually in a very small form factor and cannot afford the extra space from the increased components of a switcher. Additionally, with the very low-power requirements, the heat rise from the power dissipation is negligible. For cell phone applications, the charge currents are typically in the 350 mA to 700 mA range. In this range, many times a linear solution is still very viable. With the added cost pressure for these typically low-cost phones, linear chargers become an ideal solution. For smartphone applications where the battery size is increased and the charge current demand can be greater than 1.5 A, the switching solution makes more sense. At 1.5 A currents, the heat dissipated can be quite large. For example, when charging a 3.6 V battery from a 5 V adapter with a linear, the efficiency is 72 percent. At first, this doesn’t sound too bad. If you look at it from a power dissipated point of view, this application would dissipate approximately 2 W. In an application with a thermal resistance ($?_{JA}$) of 40°C/W, there is an 80°C rise in the die temperature. At a 40°C ambient temperature, the board could heat up to 120°C, which is unacceptable for a handheld device. The problem becomes even worse at very low battery voltages

(i.e., 3 V). Under the same conditions at 3 V the temperature rises to 120°C. Looking at a switcher solution for the same conditions the efficiency increases to approximately 85 percent, when using a single-cell IC charger. With a 3.6 V battery, the power dissipated is less than 1 W, leading to a temperature rise of 40°C. The improvement is more dramatic at 3 V. Assuming 80 percent efficiency at 3 V output, the power dissipated is less than 800 mW, so the temperature rise is even less (approximately 32°C). The form factors for these smartphones usually allow for a little bit larger solution and can stand the nominal cost increase associated with the switch mode solution.

Selecting the Right IC For the Job

After completing the preliminary thermal analysis and selecting the charger topology, you can move on to selecting the best IC for the application. New battery charger solutions integrate many features that can be leveraged to improve the system. Features such as Input overvoltage protection, power-path management (PPM), V_{IN_DPM}, thermal regulation, negative temperature coefficient thermistor (NTC) monitoring and USB charging are implemented into many battery charger ICs. Most single-cell charger solutions have the required FETs integrated into the device to save on board area.

Single Input Versus Dual Input Overvoltage Protection

With USB being the most common source for peripherals in today’s market, charging from the USB source has become a necessity. The market has morphed from the initial dual-input with a dedicated AC adapter and separate USB connector to a single-input solution that leverages a wall adapter with a USB connector that uses the same cable as the USB input. This led to a migration from a dual-input solution to a single-input solution. The single-input created many challenges with the interface. With so many aftermarket adapter solutions and a universal connector, the input must withstand much higher voltage without damage. Since the battery charger is always connected to the input, it makes sense that the charger could protect everything downstream from over voltage conditions. To implement this, many solutions are available that can withstand 20 V or even 30 V. Additionally, these devices have overvoltage protection (OVP) circuitry that inhibits operation, if the input is above the OVP threshold. This further protects the downstream circuits from possible transient overvoltage situations.

These days with the introduction of green inputs (i.e., solar cells) or wireless charging, the applications are again migrating to the dual-input requirement. Both configurations are available based on the application requirements.

Power-path Management/Minimum System Voltage

The traditional approach for battery chargers has been to connect the system directly to the battery for the charger to power both the battery and then system in parallel. The total current to the system is then regulated, which presents several issues. Specifically, low battery startup, termination interference and early timer timeout. Power-path management eliminates these issues by monitoring the battery current separately from the system current [2].

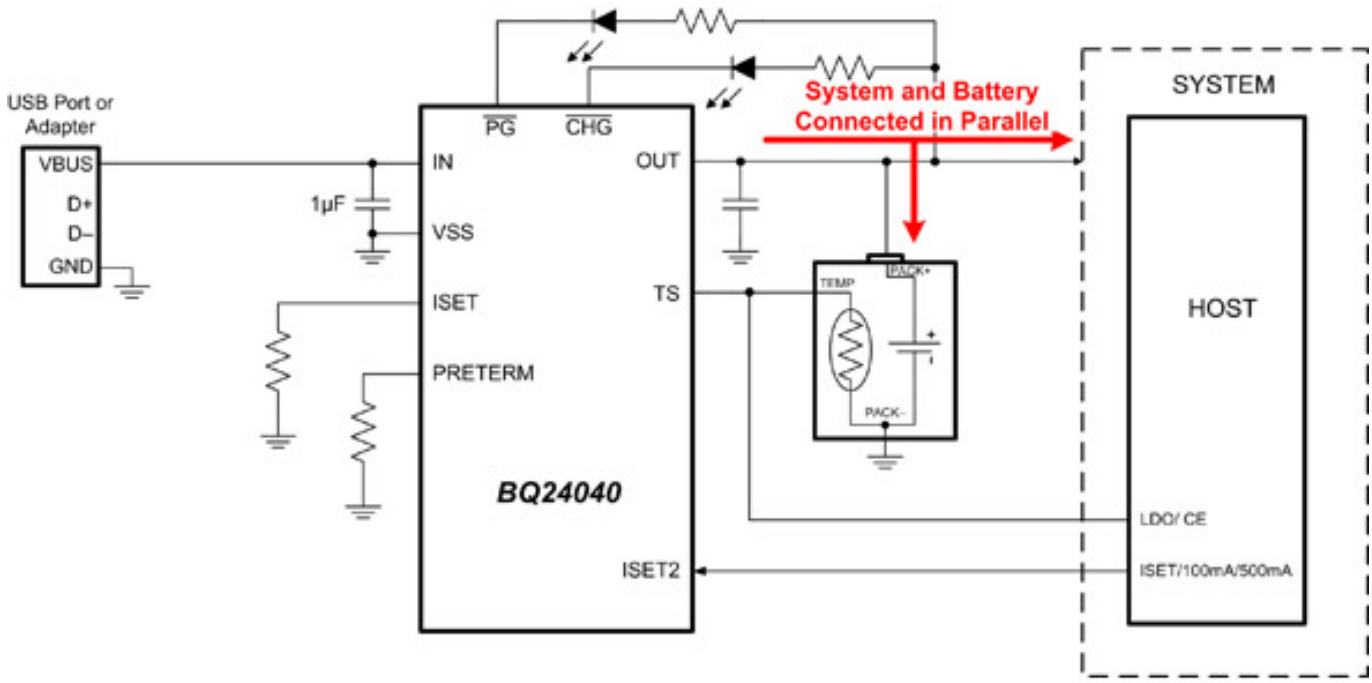

Figure 2. An example of a traditional topology.

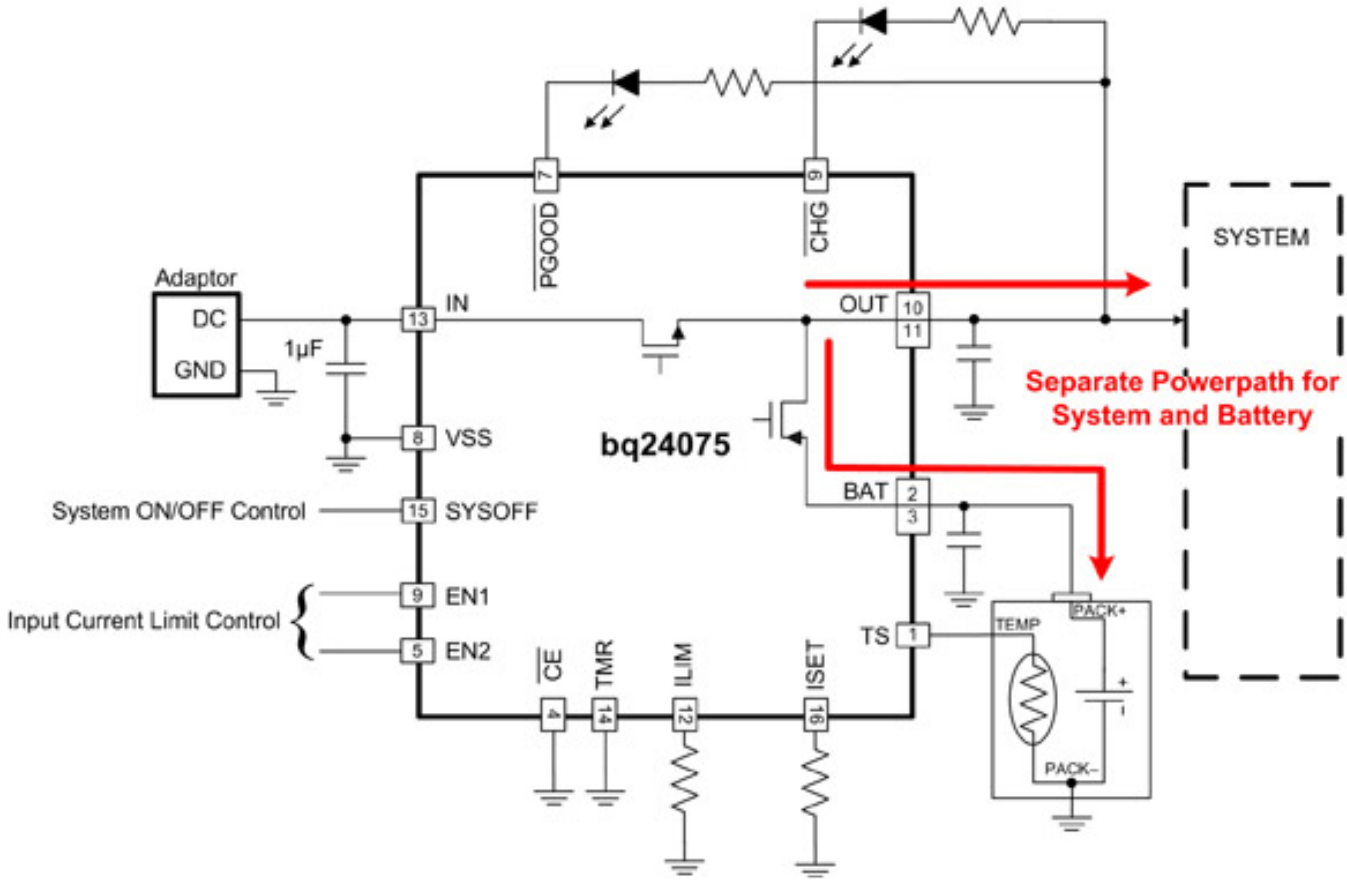

Figure 3. An example of Power-path topology.

Minimum System Voltage

With the traditional approach, the system voltage is always the same as the

battery. Thus, with a deeply discharged battery, systems will not start up until the battery charges to a usable level. With PPM, the system voltage is regulated separately from the battery voltage. This means that a minimum system voltage is possible, regardless of the battery voltage. For users, this means that they can use the device as soon as the adapter is connected, assuming it has enough power to drive the system. Some devices like the bq25060 provide this function only.

Faster Charge Time

Because the system current and charge current is programmed separately, the full power of the adapter may be used regardless of the capacity of the battery and the charge current. In traditional topologies, the charger's output current must be set to the maximum charge current for cases where there is no system load. When in system load is present, the effective charge current is reduced as the system siphons off the available current. For instance, using the traditional method with a system using a 900 mA adapter and a 500 mAhr battery, a 500mA charge current can be programmed. If the system load is 200 mA, the effective charge current is only 300 mA, nearly doubling the charge time. If the same case is examined using PPM, the input current limit is programmed to 900 mA. This allows a full 500 mA charge current with up to 400 mA additional system current.

Termination and Early Timer Timeout

In the traditional system where the total current is regulated, the current is shared between the battery and load. If the system load is heavy enough to where it pulls charge current from the battery and the battery does not charge before the timer times out, the timer has falsely timed out. Additionally, if the system current never falls below the programmed termination current, termination never occurs. Power-path management prevents these conditions by monitoring the charge current separately and using dynamically adjustable timers that adjust with reductions in charge current. For the termination issues, the charge current is monitored separately making it easy to measure termination conditions.

Input Voltage-based Dynamic Power Management (V_{IN}-DPM)

To prevent brown-out conditions where the input source is overloaded, several devices implement input voltage-based dynamic power management (V_{IN}-DPM). This loop decreases the input current limit to prevent the input from crashing. The V_{IN}-DPM loop effectively regulates the input voltage to maximize the current from the source. Figure 4 shows the results of overloading the USB port without the V_{IN}-DPM protection. Note that when the input voltage falls below the power good threshold, the charger turns off. This turns off the load from the source and allows the input voltage to recover, which turns on the charger. This on/off pulsing is undesirable.

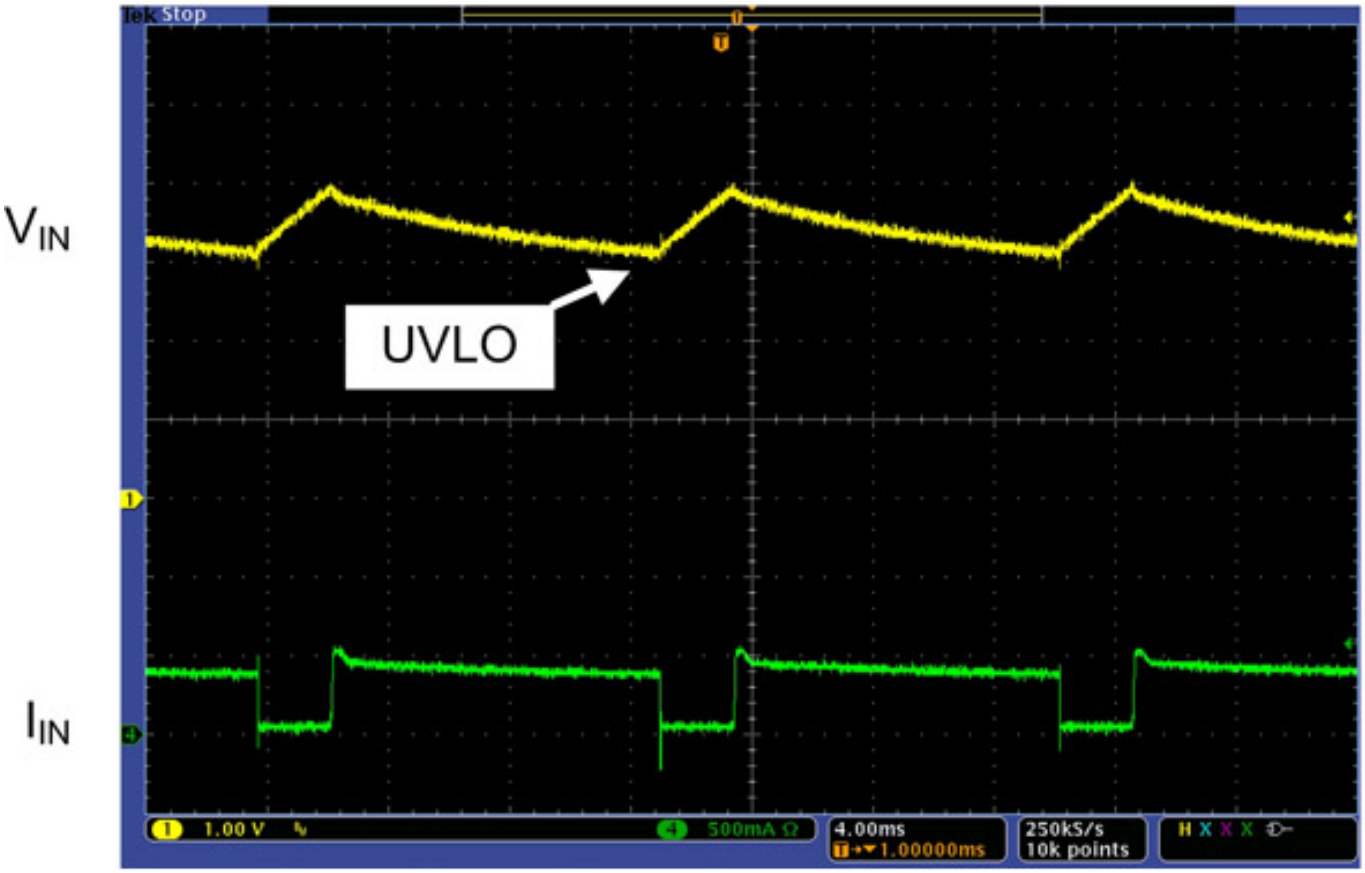

Figure 4. Input crashing with no VIN-DPM.

V_{IN}-DPM prevents pulsing by limiting the input current to prevent the input source from crashing. Figure 5 shows the results of overloading the USB port. The V_{IN}-DPM function kicks in to reduce the input current limit and prevent the source from crashing.

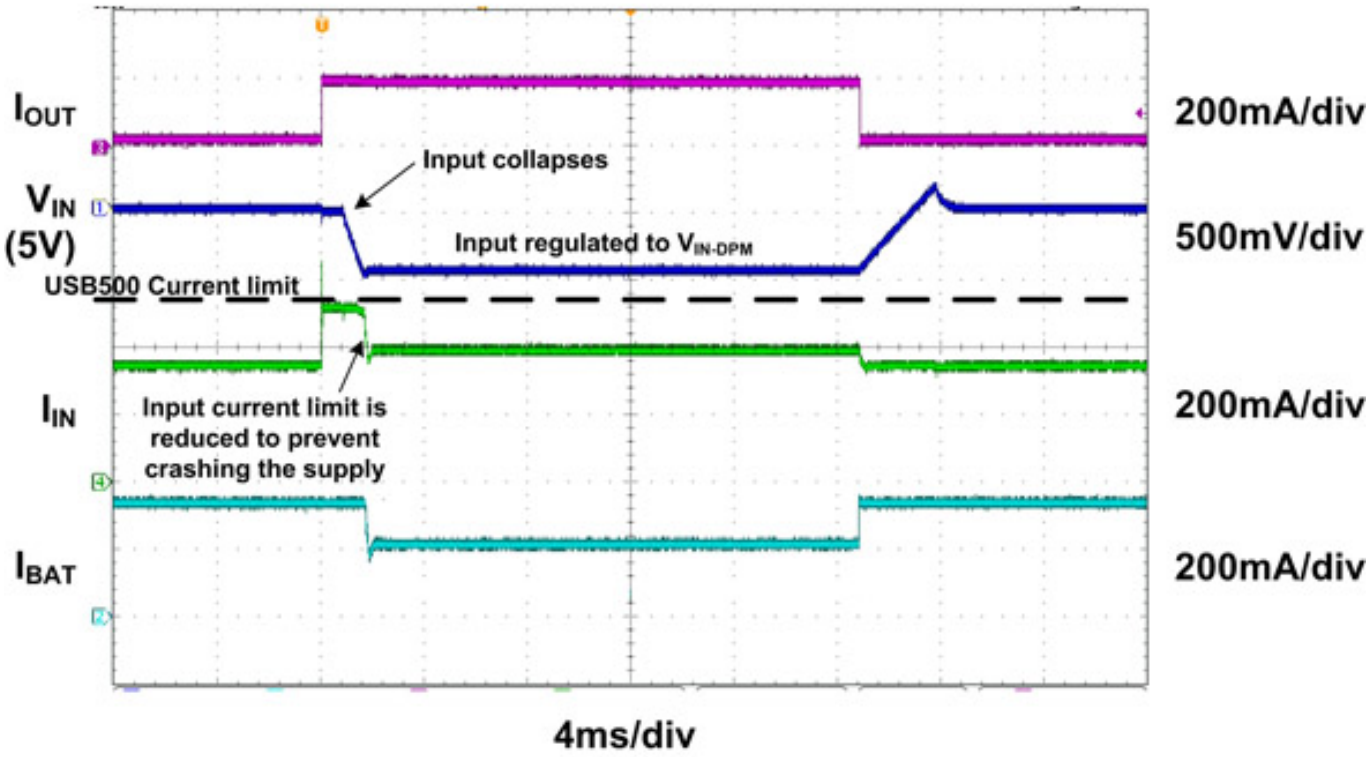

Figure 5. Input overload protection using VIN-DPM.

NTC Monitoring

The battery temperature is extremely important to monitor during charging to prevent damage or even the explosion of the battery pack. Typically this is done by monitoring an NTC thermistor integrated into the battery pack or located close to the battery pack on the system board. Many chargers have an NTC monitoring function integrated into the IC. These ICs monitor the temperature and disable charge current, if the battery temperature is at unsafe temperatures.

An emerging standard for battery charging is the Japanese Battery Temperature Standard (JEITA). This standard provides guidance on some intermediate temperatures where charge voltage or current is reduced to provide safer operation. This JEITA standard is also easily implemented in many charger ICs. For instance, single-input single-cell Li-Ion battery chargers integrate a stand-alone solution that requires no host interaction. For a system where the NTC is monitored by the host, many ICs provide very easy implementation. Using a charger that provides an I2C interface that allows the user to dynamically change the charge voltage and charge current, the host modifies charging parameters based on the battery cell temperature. This method provides the flexibility of setting the required temperature thresholds for different platforms and batteries with no hardware change.

USB Charging Compliance and Extra Power Outputs

For USB charging, many charger ICs are available that integrate the USB100 and USB500 current limits. Running all of the downstream circuitry from the USB charger output ensures that the USB current limits are not exceeded [3].

With the popularity of USB charging, many applications require a USB PHY or USB transceiver to enumerate with the host. As a result, these devices are usually connected directly to the VBUS supply and require overvoltage protection. As a result, many charger ICs integrate a 5V LDO connected and powered from the source. This output is active whenever a valid source is connected. The 5V LDO regulation voltage protects the USB circuitry from unregulated adapters and other overvoltage conditions.

Conclusion
There are many options available for charging single-cell Li-Ion batteries. Requirements such as charging current, available space, USB-compliance, cost and feature set all must be examined in order to choose the best solution. Start by ranking the requirements by importance, and then select the topology that best fits the requirements. Be sure to take thermal considerations into account and finally, choose the most cost-effective solution for each output. Following these simple steps should take the difficulty out of your battery charger design.

References
1. For more information on calculating thermal resistances and thermal modeling, please refer to the following app note: IC Package Thermal Metrics (SPRA953A), Texas Instruments, January 26, 2007.
2. See datasheets for the bq24030 and bq2407x for examples of devices that integrate power-path management.
3. For more information on USB charging, see this article: Some tips for charging from USB sources, EE Times, January 25, 2010.

About the Author

William (Will) Hadden is a systems engineer for the Battery Charge Management group at Texas Instruments. Will has many years of experience with battery chargers and analog power supply integrated circuits. He received his BSE in Electrical Engineering from Arizona State University. Will can be reached at ti_willhadden@list.ti.com [1].

Source URL (retrieved on *12/20/2013 - 7:38am*):
http://www.ecnmag.com/articles/2011/01/choose-charger-ic-single-cell-li-ion-battery-applications

Links:
[1] mailto:ti_willhadden@list.ti.com