Lighting the Future

Bill Weiss, Lighting Applications Business Development Manager, Power Integrations

Throughout the world there is pressure to develop a direct plug-in replacement for the incandescent bulb. Such a replacement must not only provide an equivalent perceived omni-directional light output, but must mimic the behavior of incandescent bulbs sufficiently well to enable existing dimming controllers to work without any component or wiring changes.

Figure 1 shows the structure of a typical integral LED lamp. It contains the driver circuit, LED cluster, and a case that provides both mechanical protection and heat sinking for the driver and LEDs.

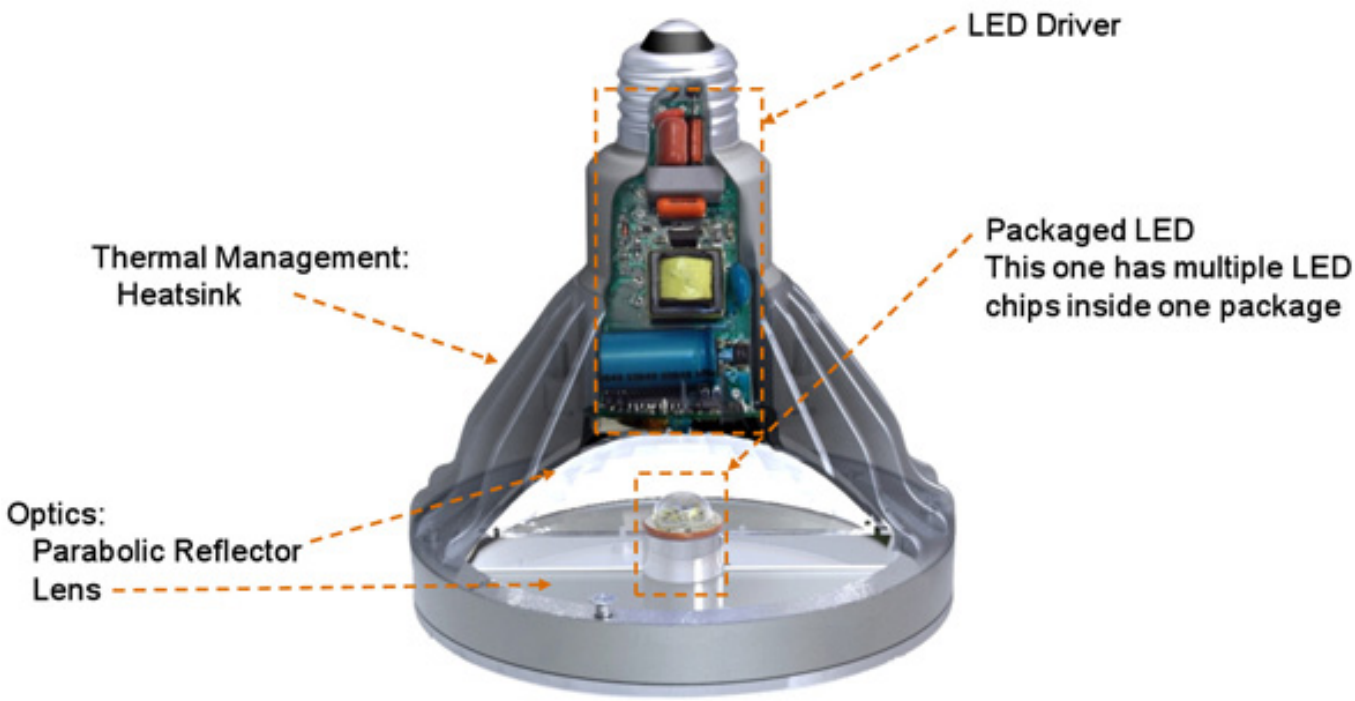

Figure 1. Anatomy of an integral LED lamp

The requirements of the LED driver are very demanding. It must be highly efficient, meet tough EMI and power factor specifications, and safely withstand fault conditions. One of the most difficult demands of all is dimming. The mismatch between LED lamp characteristics and dimming controllers designed for incandescent lamps often results in poor performance.

Lighting controllers operate by either line dimming or PWM dimming. The simplest form of line dimming is the leading-edge TRIAC controller. This is by far the most common form of lighting control, which is unfortunate because TRIAC controllers cause considerable problems when attempting to dim LED lamps. More

sophisticated line dimmers are electronic leading-edge or trailing-edge dimmers. PWM dimmers are used in professional lighting installations.

The solution to achieving good dimming performance lies in the specification and design of the LED driver.

A non-isolated dimmable LED driver
Figure 2 shows a complete application schematic for a non-isolated dimmable LED driver that could be used in an incandescent replacement LED lamp.

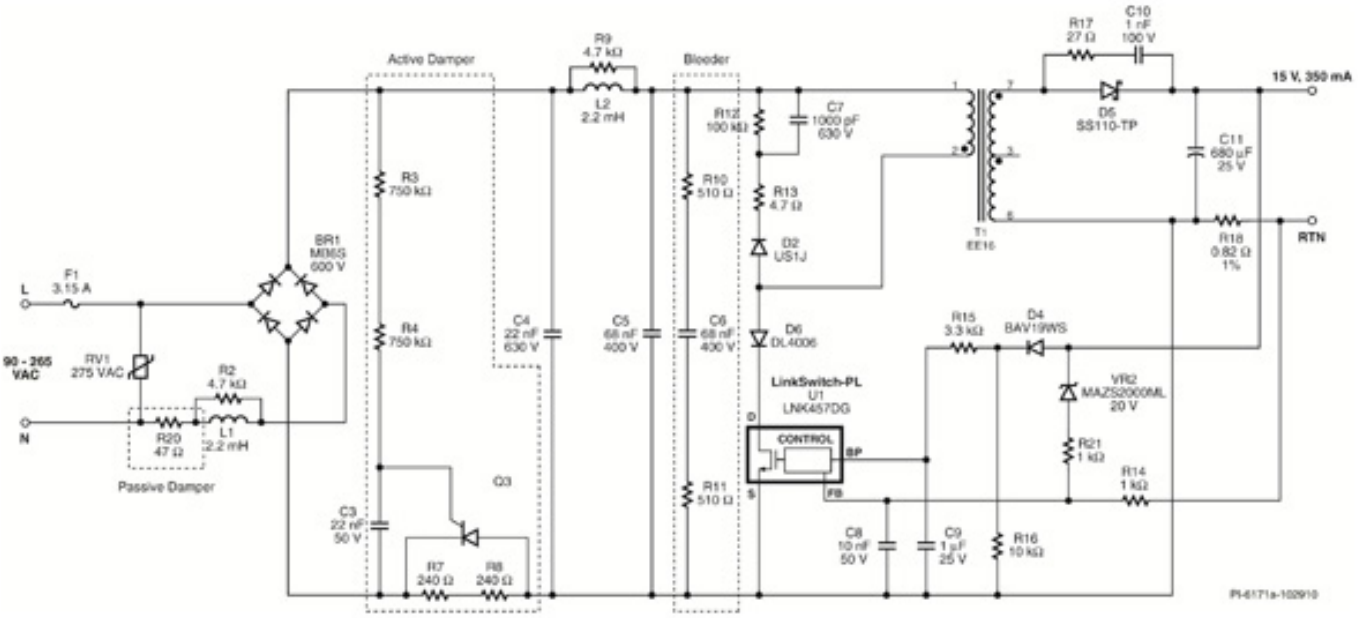

Figure 2. Schematic of a 5 W TRIAC-dimmable LED driver for A19 incandescent lamp replacement

The controller is a LinkSwitch-PL device produced by Power Integrations. It combines a high-voltage power MOSFET switch with a power supply controller in one monolithic IC. The device provides single-stage power factor correction (PFC) plus LED current control. The circuit operates as a discontinuous mode, variable frequency, variable on-time flyback converter. The rectified AC mains input is switched by the integrated 725 V power MOSFET via the high-frequency transformer. The voltage developed across the secondary winding is rectified and smoothed before being presented to the LED load.

The output current in this design is independent of the characteristics of the power transformer. Inductance variations have no effect on the constant current characteristic. This allows a very tight tolerance to be achieved for the constant current characteristic, exceptional for a single-stage converter.

To implement dimming control, the LinkSwitch-PL device detects both the line voltage zero crossing and the TRIAC dimmer conduction angle. The line voltage zero crossing is sensed internally via the drain node. The control circuit processes this data and sets the required feedback voltage, and thus the LED load current.

To help overcome the challenges of operating a low-power LED lamp from a TRIAC dimmer designed for higher power loads, three elements are added: a passive damper, an active damper, and a bleeder.

The resistor R20 forms the passive damper. The active damper circuit connects a series resistance (R7 and R8) with the input rectifier for a period of each AC half-cycle; it is then bypassed for the remainder of the AC cycle by a parallel SCR (Q3). Resistors R3, R4, and C3 determine the delay before the turn-on of Q3 which then shorts out the damper resistors R7 and R8. The passive and active dampers together limit the peak inrush current when the TRIAC fires on each half cycle.

Resistors R10, R11, and C6 form a bleeder network which ensures the initial input current is high enough to meet the TRIAC holding current requirement, especially during small conduction angles. For non-dimming applications, the passive damper, active damper, and bleeder may be omitted.

Isolated LED driver
For higher power LED lighting systems, where electrical isolation is desired, PI produces the LinkSwitch-PH controller. Figure 3 shows the schematic for an isolated LED driver.

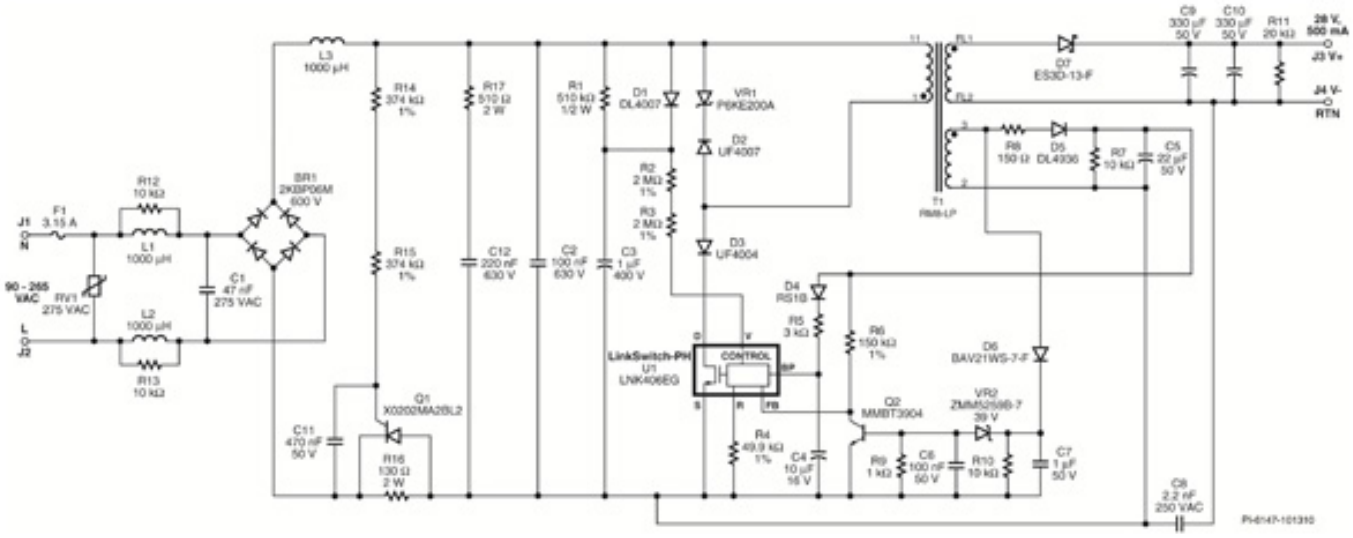

Figure 3. Schematic for a 14 W, TRIAC dimmable, high power factor LED Driver

The circuit is designed to drive a nominal LED string voltage of 28 V at 0.5 A from an input voltage range of 90 VAC to 265 VAC and features ultra-wide dimming range, flicker-free operation (even with low-cost, AC line TRIAC dimmers) and fast, clean turn-on.

The topology used is an isolated flyback configuration operating in continuous conduction mode. Output current regulation is sensed entirely from the primary side, eliminating the need for secondary side feedback components. The single-stage internal controller adjusts the high-voltage power MOSFET duty cycle to maintain a sinusoidal input current and therefore high power factor and low

harmonic currents.

In any LED luminaire, the driver determines many of the performance attributes experienced by the user, including startup time, dimming, flicker-free operation, and unit-to-unit consistency. The 14 W driver was designed to provide compatibility with a wide range of dimmers and as large of a dimming range as possible, at both 115 VAC and 230 VAC. For this reason, the damper and bleeder circuits have been made relatively aggressive. The penalty of this is efficiency. Even so, the circuit achieves ?85% at 115 VAC and ?87% at 230 VAC. Higher efficiency can be achieved if no dimming capability is provided, in which case the damper and bleeder functions are omitted.

These tradeoffs highlight a philosophical question as LED lighting gains traction in the market. With a new technology that consumes one tenth of the power of the old, is it really necessary to provide compatibility with the complete spectrum of old TRIAC controllers if the penalty is reduced efficiency (i.e., energy waste)? We must keep in mind the ultimate goals of maximum efficiency and minimum lifetime cost for the complete lighting solution.

Source URL (retrieved on *09/16/2014 - 6:53am*):
http://www.ecnmag.com/articles/2010/12/lighting-future?qt-recent_content=0