# Design Guidelines for Transistor Output Optocouplers

Larry Sisken, Product Marketing Manager and Van Tran, Sr. Applications Engineer, CEL

A standard optocoupler provides complete electrical isolation of electronic circuits from input to output while transmitting information across that electrical isolation barrier using infrared light from the phototransistor contained inside the optocoupler.

There are two primary operating modes for transistor output optocouplers: Linear mode and digital logic mode. Optocouplers can provide isolation benefits for many possible circuits, but for this article we will assume a simple common collector configuration for the phototransistor output.

**Linear Mode and Digital Logic Mode**
In linear mode, the optocoupler output is a simple copy of the input signal with its amplitude a product of the input signal and the current transfer ratio (CTR). A key condition for the linear mode is that the phototransistor is not in saturation.

In digital logic mode, the output signal is either logic high (~Vcc) or low (i.e. ground level), and ideally the phototransistor goes into saturation when the transistor output switches to logic high so that the power consumption would be at a very low level. Typically, for a silicon-based phototransistor, the saturation voltage across the collector and emitter, VCE, would be at 0.3 V or less.

**Parameter Definition**
*Current Transfer Ratio* (CTR) is the ratio of the phototransistor collector current compared to the infrared emitting diode (IRED) forward current expressed as a percentage (%).

CTR=(IC/IF)*100

The CTR depends upon the current gain (hfe) of the transistor, the supply voltage to the phototransistor, the forward current through the IRED and operating temperature.

Figure 1 is the CTR versus forward, current (IF) graph for a PS2501-1-A supplied by Renesas Electronics.

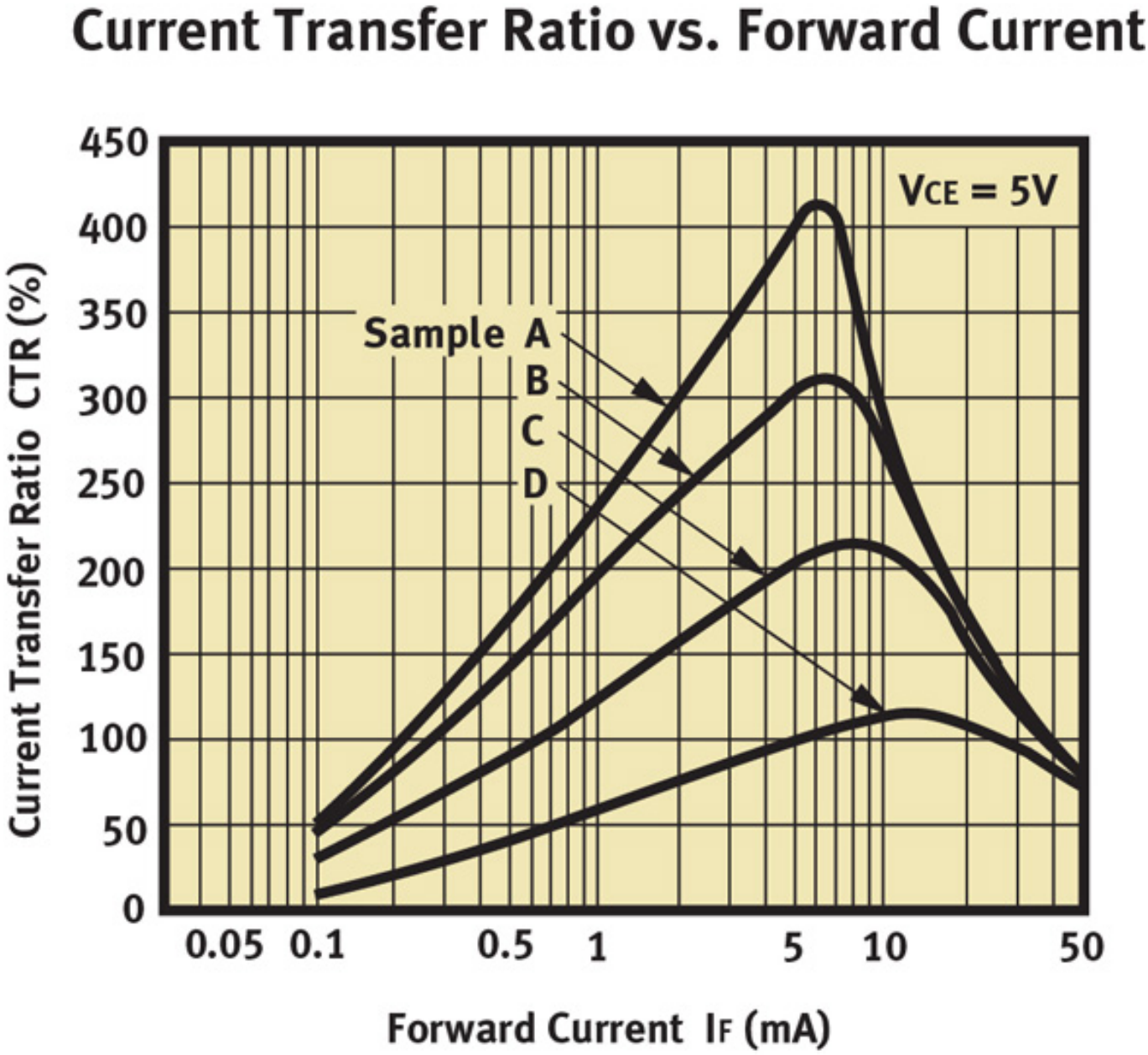


**Fig 1: CTR vs. Forward Current**

Note: The technical data in this article is based on a Renesas optocoupler PS2501-1-A. Measurements were done at nominal room temperature using the common collector circuit configuration and operating at 5 V. Since the emitter current is approximately equal to collector current, IE?IC, they are used interchangeably.

**Linear Mode Operation**
In the common collector configuration (see Figure 2), the output is taken at the emitter. The output transitions from low to high when the optocoupler input transitions to high.

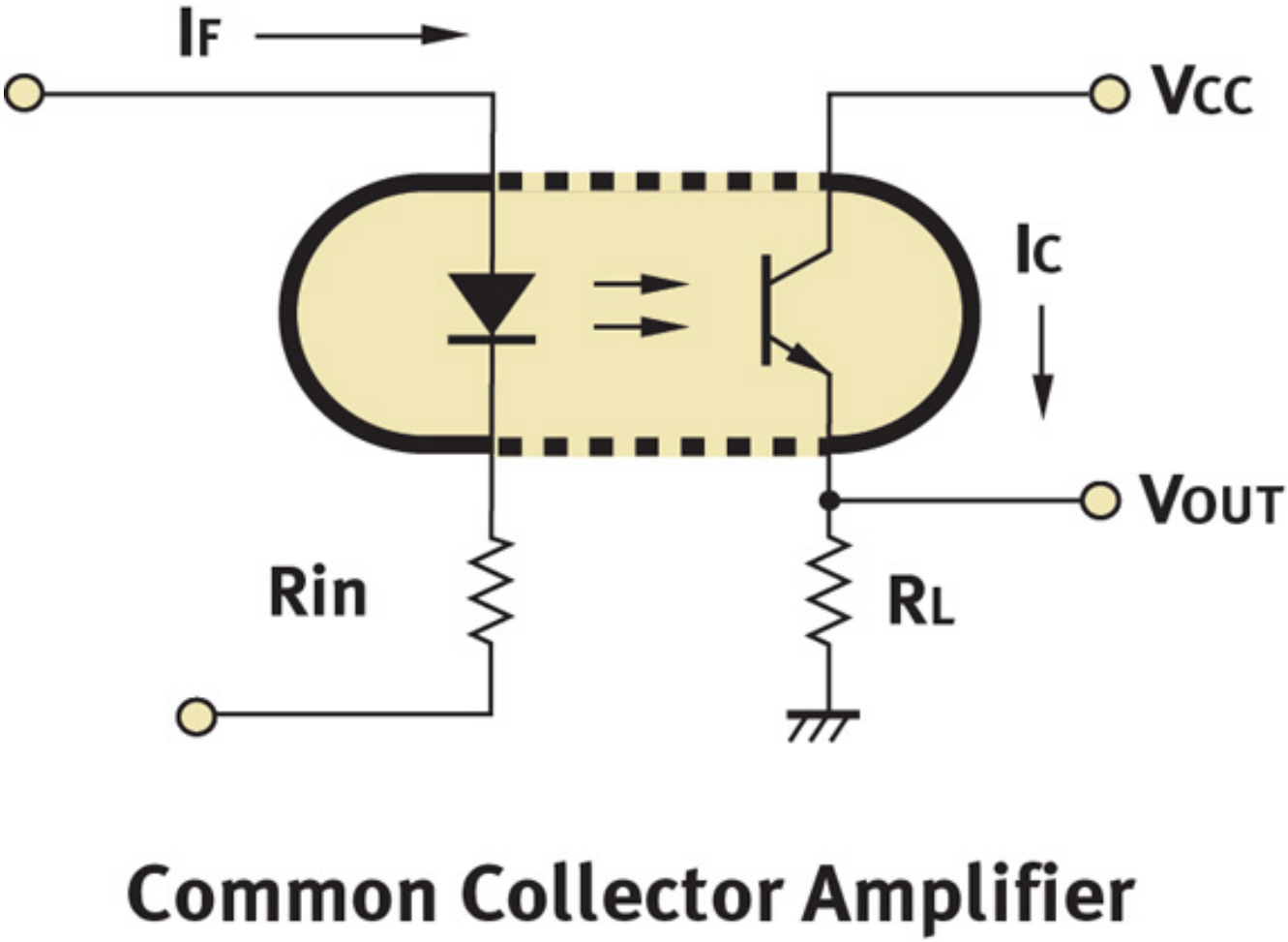


**Figure 2. Common collector amplifier.**

The output voltage is at the load resistor between the emitter pin and ground. The load resistor RL, is chosen to make sure that

Vcc–(IE*RL)>0.7 V

IE is the emitter current through load resistor RL.  To work effectively in the linear mode, RL should be small, typically around 470? or less, depending on the drive current IF and the design objective.

To show how the forward current, IF, and load resistor, RL, affect the collector-emitter voltage VCE, and emitter current IE, data was collected at other values and is shown in figures 3 and 4 for reference.

From these graphs, we can see that the load resistor RL at 470? would limit the linear operating region of the forward current, IF to around 4 mA or less.

In comparison, the load resistor value of 100? would extend the linear operating region up to 8 mA. Note that with a load resistor of 100? the value for VCE does not go below about 2.5 V.

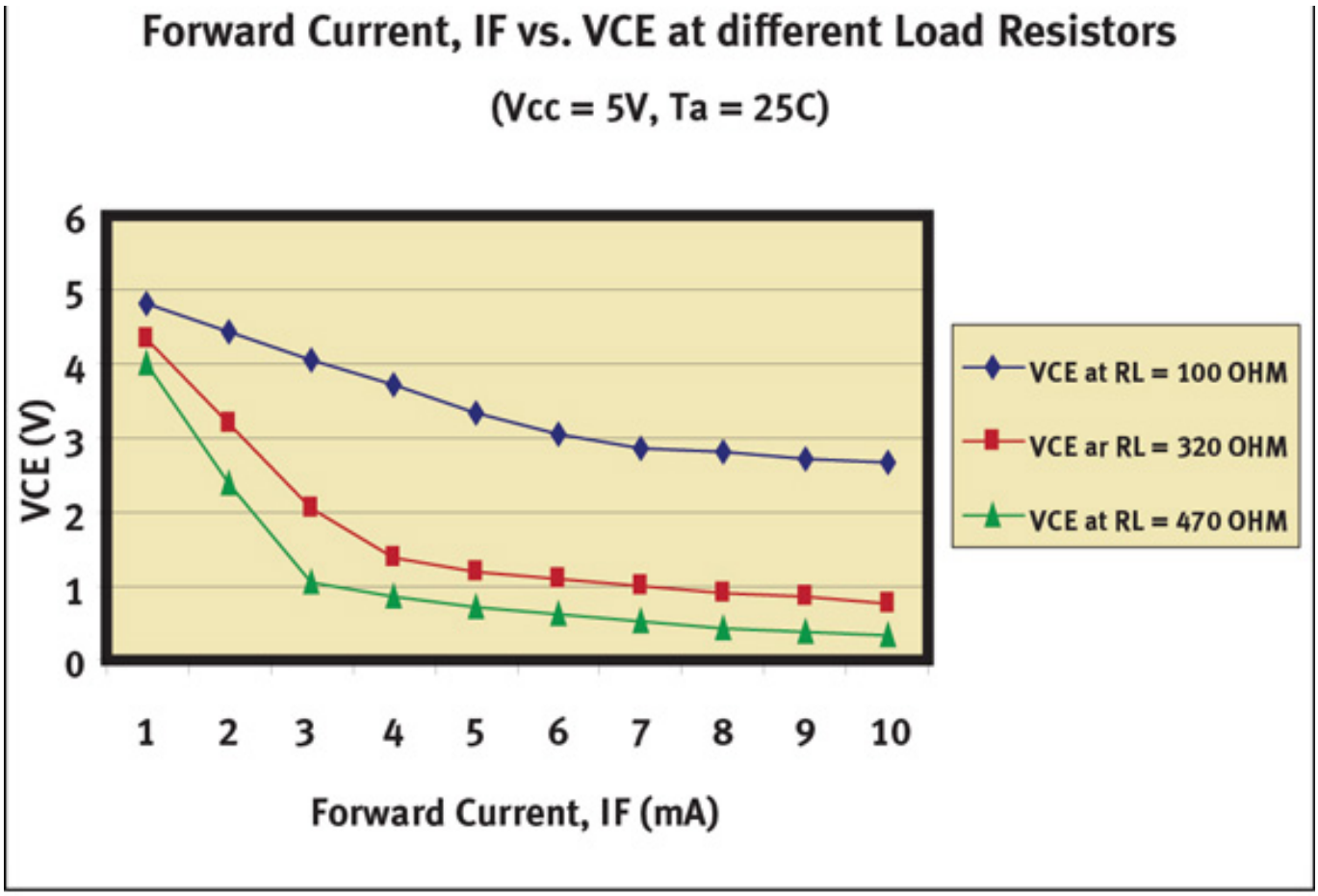


**Figure 3. Collector-emitter voltage versus forward current at different load resistors.**

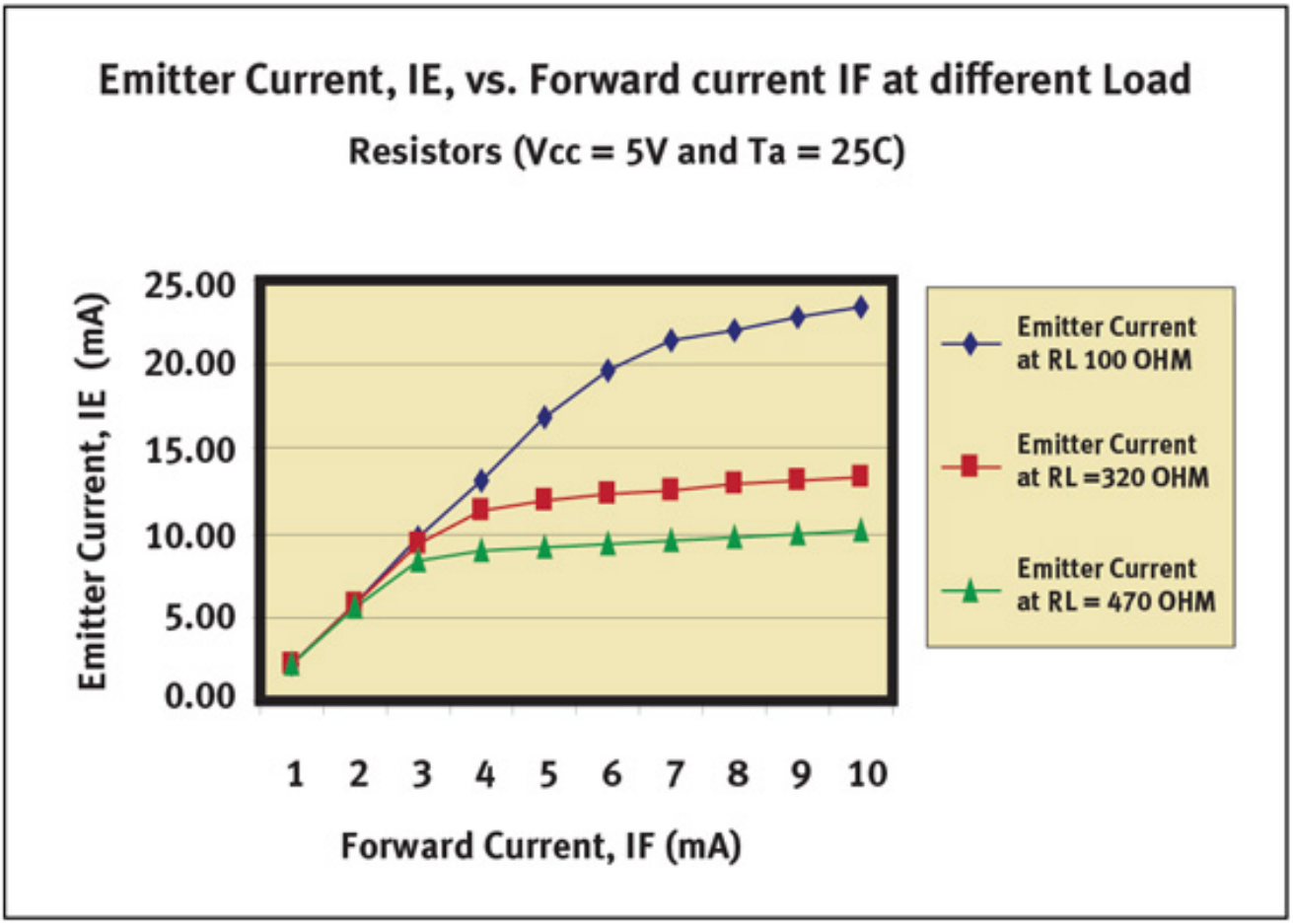


**Figure 4. Emitter current versus forward current at different load resistors.**

**Digital Logic Mode**
To operate in digital logic mode, the output transistor will be in saturation.

Method 1 – defining IC

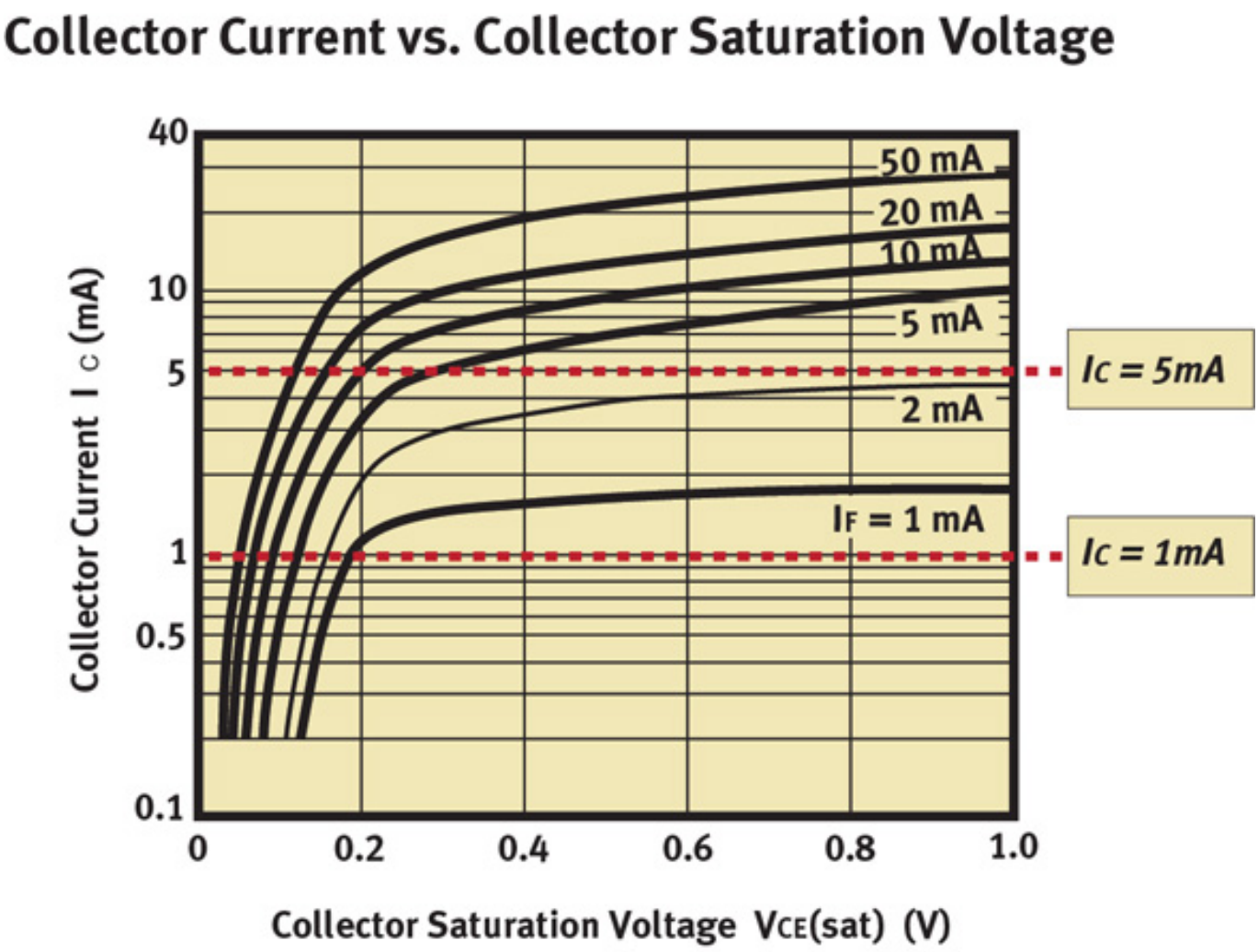


**Figure 5. Collector Current versus collector saturation voltage**

To operate in saturation, one must select the constant collector current at 1 mA as shown in Figure 5 so that VCE is at 0.2 V or less. Note that it achieves a 1 mA IC and 0.2 V VCE with a forward current IF of 1 mA or greater

RL=Vcc/1mA=5V/1mA=5K?.

In practice, RL should be chosen with ~30 percent tolerance, so selecting RL=6.8 K? is appropriate. Any resistance value that is greater than 6.8 K? would lead to the degradation of the rise and fall time which affects the switching time of the optocoupler.

Forward current IF should be chosen between 1.0 mA to 3.0 mA as shown in Figure 5 since a further increase of IF will not make any significant difference in the output, Vout.

Collected data is in table 1.

| Forward Current, $I_F$ ( mA) | RL =5.67K | | |
|---|---|---|---|
| | VOUT (V) | VCE (V) | IE (mA) |
| 1 | 4.85 | 0.17 | 0.86 |
| 2 | 4.88 | 0.13 | 0.86 |
| 3 | 4.89 | 0.12 | 0.86 |
| 4 | 4.90 | 0.11 | 0.86 |
| 5 | 4.91 | 0.10 | 0.87 |
| 6 | 4.92 | 0.09 | 0.87 |

**Table 1. Forward current, IF versus Vout**

Some applications may require a higher forward current, IF, such as 10 mA.

Looking at Figure 5, choose Ic = 5 mA; then select RL so that the product of (RL*IC)>5 V. Select any resistance value of 1.2 K? or greater.

A 6.8K? resistor will still work, but the switching time will be slower.

Method 2 – using CTR
There are instances where one will use an optocoupler with a specific CTR rank in digital logic mode.

For example, Renesas “M” rank for the PS2501-1-A (CTR = 80 to 160 percent).

The following should be taken into consideration:
1. The design should be based on the low end of the CTR rank (80 percent)
2. The design should use IF equal to the forward current used for the CTR analysis (IF=5ma for the PS2501-1-A). Therefore IC=5 mA*.8=4 mA.
$RL_{calculated}$= Vcc/4m A=5 V/4 mA=1.25 K?. Preferably, select $RL_{actual}$=2*$RL_{calculated}$ =2.7 K?. Should the designer choose an IF other than 5 mA, the CTR will change and the design will be more complicated

**Conclusion**
When using optocouplers, it is important for the designer to understand whether linear mode or digital logic mode is required.

**Source URL (retrieved on *12/08/2013 - 11:10pm*):**
http://www.ecnmag.com/articles/2010/12/design-guidelines-transistor-output-optocouplers