USB 3.0 Ushers In Plug-And-Play Displays At Multi-Gigabit Speed

Mark Fu, SMSC

With the more than 10 billion PC peripherals and consumer gadgets sporting a USB connector as their primary or only interface to the rest of the world, USB is arguably the most successful connectivity technology the world has ever seen. What's more astonishing is that the USB ecosystem continues to expand at an estimated annual rate of 3 billion units, bringing plug-and-play simplicity to virtually any electronics equipment that aims to provide a "just works" user experience out of the box. The universally recognizable USB connectors and cables are regarded as symbols of compatibility, ensuring users of all experience levels a seamlessly, ubiquitously connected world.

USB 1.1, the original specification that jumpstarted the revolution more than 15 years ago by providing standardization to incompatible legacy IO ports, revolutionized how personal computers interact with human interface peripherals. USB 2.0, a 40X speed upgrade to 480 Mbps, became the de facto consumer interface to personal storage that helped enable and popularize digital photography and consumer audio. Spurred by the continual increase in storage capacity and abundance of multimedia content, consumers now want even faster access to their content to quickly synchronize, share and store among multiple devices. USB 3.0 or Super Speed USB, the next generation of USB technology, delivers this new level of performance to keep pace with the insatiable consumer appetite for speed. At 5Gbps, 10X the USB 2.0 data rate, USB 3.0 will extend USB's popularity as the preferred consumer storage interface to support the fast sync-and-go life style. What's more exciting about USB 3.0 is not only its performance headroom to support storage devices in the future, but its potential to enable new applications that are unreachable by USB to date. One example of this new use case is USB displays.

While the PC monitor continues its evolutionary advancement in increasing display resolution from VGA to XGA, UXGA, and WUXGA, the interface technology that keeps up with the pixel count are moving to DVI, HDMI and DisplayPort. To maintain compatibility with the legacy installed base while introducing new interface

standards, new connectors are added without throwing away the old. These incompatible, coexisting display connectors on a modern PC are posting design challenges and causing user confusion. In this day and age where minimalist design and ultra portability become the dominant design language for personal computers and consumer electronics, duplicating connectors for serving the same purpose raises serious questions of practicality. The fact is, USB is ubiquitous on nearly all consumer devices that a user has, on the desktop, in the living room, in shirt pockets, and even in the car; leveraging the existing USB connector for new purposes makes economical sense. In addition, users of all experience levels worldwide are already familiar with USB; using USB to attach a monitor should be as instinctive as using a USB mouse, keyboard, printer, or flash drive. However, due to the sheer bandwidth required to render graphics over USB, USB 2.0 was not up to task unless compression is applied before pixels are shipped over the 480 Mbps link. USB 3.0 lifts this limitation. The 5 Gbps available bandwidth makes USB-attached displays technically and practically possible. In addition to its sheer speed, USB 3.0 offers other benefits at the physical layer, link layer, and protocol layer that make it a good candidate for display applications.

At the physical layer, SuperSpeed USB operates at lower power per bit than USB 2.0, so the 10X increase in speed adds only a small incremental increase in power consumption. The Super Speed signals are dual simplex with dedicated TX and RX differential signal pairs; therefore the bus does not need to turn around to handle bi-directional traffic. Since a monitor is purely a data sink, the large amount of display data flowing from a USB 3.0 host to a SuperSpeed USB monitor does not impact the performance of other data sources sending bits in the opposite direction.

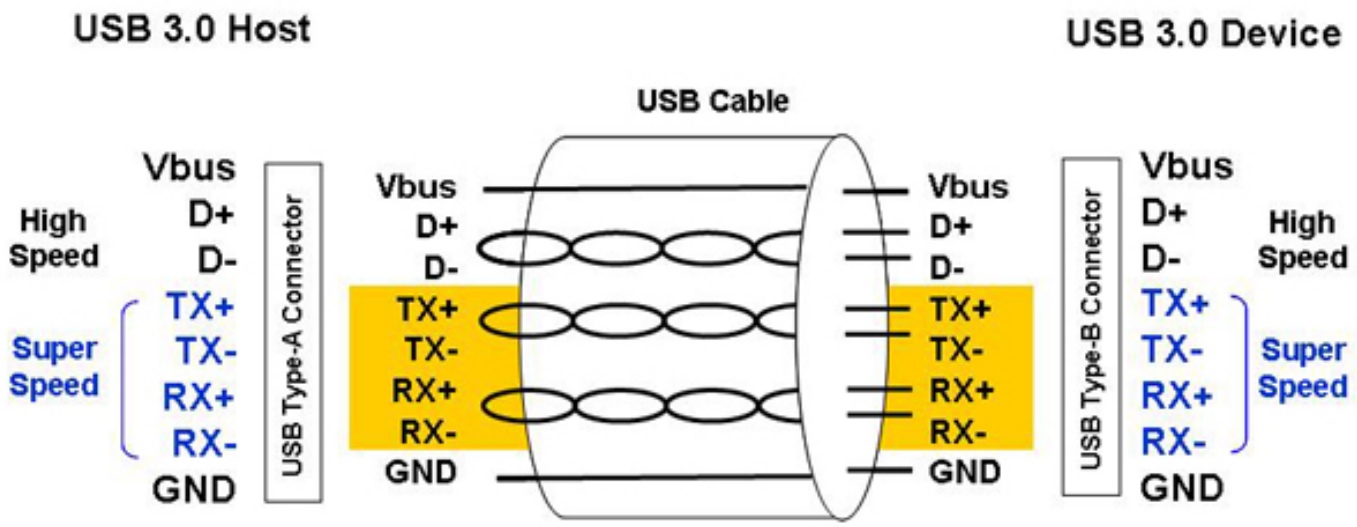

At the link layer, USB 3.0 uses advanced encoding techniques to achieve a bit error rate of 10 to 20 thus providing a robust and reliable bus for video transmission. Effective power management that expanded to four link power states provides the foundation to maximize power-per-bit efficiency. In fact, each device can drive its own link state to achieve a required power profile. When no transfers are pending for a particular device, the device can put its own link in a reduced power state without affecting others. Beyond link layer, USB 3.0 goes a step further by taking a global approach to power management. Power reduction techniques are applied at

all levels including physical, link, protocol, host, hub, and device, to achieve power efficiency for the entire system. While power consumption is minimized whenever possible, a USB 3.0 cable can source up to 4.5 W (900 mA at 5 V) on a per-port basis, nearly double the 2.5 W provided by USB 2.0 This opens up new possibilities in bus-powered applications -- perhaps capable of powering a desktop-sized monitor all by a single USB cable. More encouragingly, advancements in LCD panel technology are also focusing on drastic power reduction. Power efficient backlight LEDs, brightness enhancement films, and field sequential color LCD technology are all pushing the power consumption of a display down to manageable levels, perhaps eventually to the level that can be powered by a USB cable alone. This could lead to USB displays becoming as common as a USB mouse or flash drive.

Applications of USB displays are abundant. USB can transport video, graphics (e.g. OpenGL, DirectX), and related audio and metadata (e.g. closed caption) over a single cable. Video and audio can be transported in compressed or uncompressed formats to suit application needs at optimized bandwidth utilization. By using hubs to create a tier-star USB tree, several displays can be added to replicate mirrored images from the primary screen, or they can be organized to display completely different images as extended screens to enlarge total display surface. Multi-function monitors with built-in speakers, camera, microphone, and touch screen capabilities can pile additional control, bulk, interrupt, and isochronous data on the same USB cable to reduce cable clutter on the desktop. A primary use case in cable clutter reduction is USB docking station. As notebook PCs become ever thinner and lighter, multiple connectors are sacrificed to achieve the desirable ultra mobile form factor. At the same time, consumers are acquiring more and more personal storage and multimedia gadgets that demand more USB ports on a PC. A USB docking station is an ideal mobile PC companion that restores all the peripheral connectivity options requiring only a single USB connection to the PC. As a mobile PC returns to its home base, connecting the PC to a docking station not only adds abundant USB ports that rival its desktop counterpart, but also enables USB graphics capability in the docking station to help add a large secondary monitor to complement the limited screen size of the built-in display. The docking station can offer a slew of video connectors to match user’s monitor of all sizes and interfaces, thus freeing the mobile PC from owning the responsibility of supporting competing interface standards. At the portable front, tablets, palm top computers, and even smart phones can also strip competing video connectors to streamline industrial design by consolidating all connectivity needs to USB. For smart phones that are already relying on a shared micro-USB or mini-USB connector for data synchronization, audio headset, and battery charging, the same USB connector can be used to attach a large display to enhance video viewing experience and enable productivity applications.

As one looks at all things tethered to today's personal computer, USB has standardized the interface for nearly all peripheral types from low-speed human interface devices, to mid-speed wireless radios for personal and local area networks, to high-speed hard disk drives and flash drives for data sharing and back-up. The new era of Super Speed USB will eventually bring this versatile and ubiquitous connector to the display world, ushering USB capable displays into this thriving ecosystem.

About the Author:

Mark Fu currently serves as the director of marketing in the Connectivity Solutions Group at SMSC. Mark has over twelve years of experience in the semiconductor industry covering a wide variety of disciplines including ASIC design, design automation, and product marketing. As director of marketing at SMSC, Mark oversees the creation of high-speed connectivity solutions for PC and emerging applications. Mark's personal interests include digital convergence in home entertainment, wireless connectivity, high-definition audio/video, and mobile communication. Mark Fu received Bachelor of Science and Master of Science degrees in Electrical Engineering from San Jose State University.

Source URL (retrieved on *05/19/2013 - 10:59pm*):
http://www.ecnmag.com/articles/2010/11/usb-30-ushers-plug-and-play-displays-multi-gigabit-speed?qt-most_popular=0