Choose the Right Topology for LED Driver Design

Michael Keene, Endicott Research Group, Inc., www.ergpower.com

In order to properly drive the wide variety of LED-backlit LCDs available on the market now, electrical design engineers need to successfully implement one of many different driver topologies available. Whether the LED string voltage is higher than the voltage supply available in the system or the capability of driving multiple LED strings is needed, the most important consideration for any LED driver is the constant current source.

Some of the LED driver (constant current source) topologies currently in use are:

Linear Current Source
Linear current sources are the most widely used in low-power applications due to their small size and lack of a magnetic component such as an inductor or transformer. These are relatively easy to implement, and many fully integrated, adjustable-voltage regulators can be easily configured as a linear current source. Advantages of the linear current source are the low part count, economical cost, and relatively small size. Disadvantages are that they require greater headroom and dissipate more power than hysteretic or PWM switching current sources. This power dissipation limits them to low-power applications or applications that can tolerate large heat sinks and higher device junction temperatures.

Hysteretic Current Source
Hysteretic current sources are switching current sources. They have lower power dissipation than linear current sources, thus increasing their efficiency and their ability to drive higher power loads with fewer thermal considerations. Hysteretic current sources are typically more expensive than linear current sources due to their need for a fast switching FET or transistor, fast clamping diode, and a large inductor for energy storage. Both hysteretic and linear current sources exhibit fast transient response which allows for extremely high dimming ratios.

PWM “Buck” Current Source
Pulse Width Modulated (PWM) buck converters are comparable to hysteretic converters in terms of efficiency, size and cost, excepting the buck’s large filtering capacitor. PWM controllers are more widely available and generally more economically priced than hysteretic controllers, which offsets the cost of the large filtering capacitor. They are also generally quieter than hysteretic controllers, though not as quiet as linear controllers, but lack the fast transient response and dimming ability of linear and hysteretic current sources due to the large filtering capacitor. Special modifications can be made to allow for a higher dimming ratio, but at the expense of having to incorporate additional circuitry and cost.

PWM “Boost” Current Source
In applications where the output requires a higher voltage than the input, a PWM boost converter may be advisable. PWM boost converters operate on the same control scheme as a bucking converter, but the power components are configured

differently, resulting in a converter that must output a higher voltage than the input voltage. All of the three previously mentioned current source configurations require that the LED string voltage be less than the input voltage (and in addition, all require that the LED string be, on average, a few Volts less than the supply voltage). This feature of the boost converter makes it extremely useful for the majority of backlighting applications in which the string voltage exceeds the voltages available in a system. The boost converter is the noisiest of the converters and will also have the slowest transient response. As with the buck, additional circuitry can be implemented to achieve high dimming ratios, but the cost will be increased.

New Designs for Driving Multiple Long LED Strings
In order to adequately drive multiple LED strings that consist of more LEDs than can be powered by a 12 V supply, LED driver specialists such as ERG are incorporating the technology from the these constant current source designs to create compact drivers able to power such LED string configurations.

PWM Voltage Boost with Multiple Linear Current Sources
This driver uses a slightly different version of the PWM boost current source, followed by multiple linear current sources for each LED string. The boost uses the same control scheme as previously described and consists mostly of the same components. However, this change in configuration converts the PWM boost from a current source to a voltage source. Adding this boost circuit in front of a linear current source allows the linear current source to drive LED strings with a voltage greater than the supply voltage. The addition of a second linear current source allows it to properly drive two LED strings. There is no theoretical limit to the number of LED strings this driver can handle as long as the power handling capability of all elements is adequate and there is a linear current source allocated to each string.

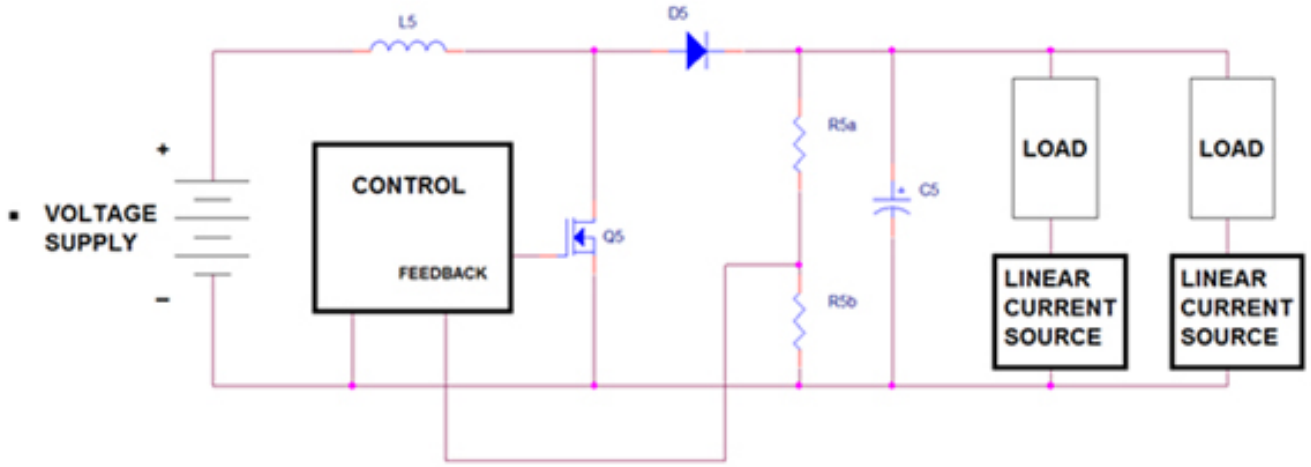

Fig. 1 – PWM boost with multiple linear current sources for multiple LED strings

This driver from ERG maintains the quick transient response of the linear current source, because the boost circuitry does not control current flow through the LEDs. Achievable external dimming steps extend well beyond 5,000:1. The relatively low cost of the linear sources allow this driver to be one of the most economical multi-

string driver topologies available. The only real disadvantage is that excess power must often be wasted in order to guarantee that the linear current sources will have enough headroom to regulate LED current over component tolerance and temperature variations. This limits the driver to efficiencies in the 75 to 85 percent range, and heat sinking considerations limit this circuit to applications around 6 W or less.

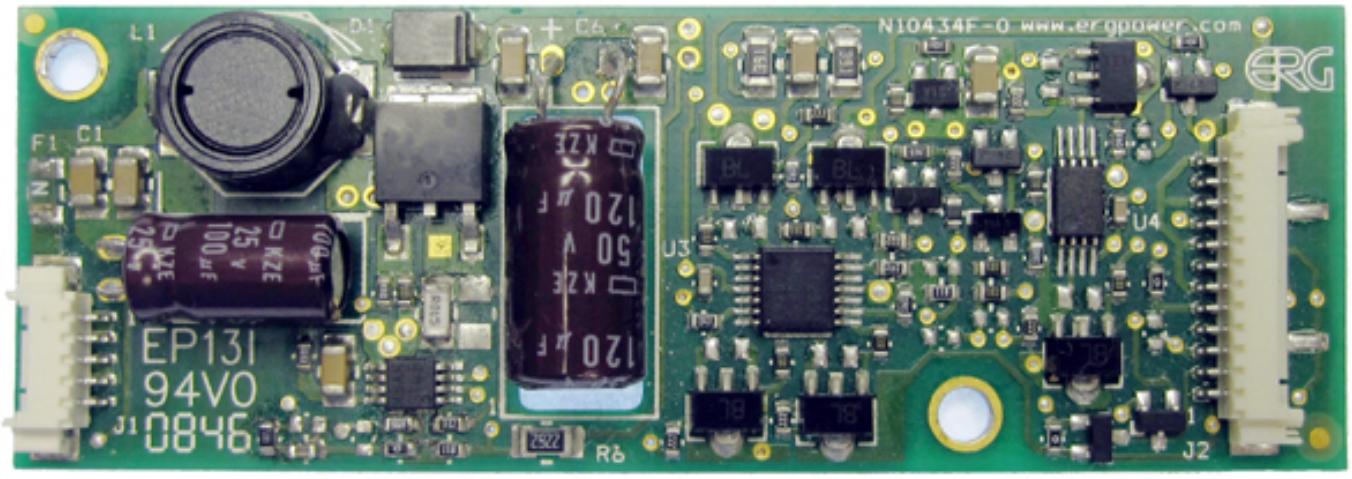

Figure 1a. ERG's SFDE Series LED drivers use PWM voltage boost with multiple linear current sources to provide optimum power for high brightness as well as lower power consumption and lower cost in a compact size.

'Adaptive' PWM Boost with Multiple Linear Current Sources

This configuration is the PWM Voltage Boost with Multiple Linear Current Sources with a design change that significantly increases efficiency. This circuit detects which LED has the highest forward voltage, then regulates the output voltage such that the linear current source has just enough headroom (typically 1 V) to properly regulate the current flowing through that string. It is recommended that this topology be used only to power multiple strings consisting of an identical number of LEDs. Drivers configured this way exhibit very high efficiency of 80 to 90 percent, with adequate transient response. They also achieve good external dimming steps -- 1000:1 or greater in some cases. The main disadvantage here is the power dissipated in the linear current sources. That power dissipation limits this topology to applications of about 10 W or less unless heat sinking and more robust pass devices in the current sources are used.

The PWM Voltage Boost with Multiple Hysteretic Current Sources

This driver integrates a voltage boost converter with hysteretic current sources to drive multiple LED strings. It is ideally suited for higher power applications in which the linear and adaptive boost driver are not optimized. It will achieve high efficiencies, and it is capable of extremely fast transient response due to the hysteretic current control. Additionally, the PWM boost with hysteretic current sources is capable of dimming steps in excess of 5,000:1, although the dimming range becomes non-linear at the lowest levels. This topology is also capable of driving multiple strings with different forward voltages as the extra power that would be wasted in the linear sources is saved in the inductor. The main disadvantage of this topology is the high cost and size of the magnetic storage

elements.

Conclusion
Although certain LED configurations lend themselves toward certain LED driver topologies, there is not one design that is best for all OEM LED backlit displays. The electrical design engineer should also consider the end user's application when selecting a driver topology, specifically size, cost, power, noise, and dimming.

Source URL (retrieved on *03/11/2014 - 1:35pm*):
http://www.ecnmag.com/articles/2010/11/choose-right-topology-led-driver-design