Thermal Management of Visible LEDs

Walter Garcia Brooks, OPTEK

LEDs fulfill a growing number of applications. Visible LEDs have a high luminous efficacy as compared to incandescent and fluorescent bulbs – and while incandescent and fluorescent bulbs have already reached near-maximum luminous efficacy – the efficacy of visible LEDs is forecasted to increase in the future.

Due to advances in chip and packaging technologies, new visible LEDs have power dissipations ranging from 500 milliwatts to as much as 10 watts in a single package. With improving luminous efficacy, these high-power LED components will replace other lighting technologies in most applications.

When using high-power visible LEDs in applications, many design aspects must be considered. These include luminous flux, dominant wavelength or color temperature, mean time between failure (MTTF) and flux degradation.

Junction temperature directly alters the performance and reliability of LEDs in the following ways:

Reduced output power: At constant operating current, the luminous efficacy decreases by about 5% for every 10° C rise in junction temperature.

Reduced forward voltage: At constant operating current, forward voltage decreases by about 20 mV for every 10° C rise in junction temperature.

Shifted dominant wavelength: Dominant wavelengths shift by about 2 nm for every 10° C change in junction temperature.

Shifted Color temperature: White LEDs are more sensitive to changes in junction temperature because the color temperature changes significantly. LEDs emit white light by combining standard blue emission with a phosphor overcoat that absorbs the blue flux and re-emits a wide range of wavelengths throughout the visible range. Re-emission efficiency is highly dependent on the wavelength of the

blue flux.

Reduced mean time to failure (MTTF) and accelerated degradation: Catastrophic failure and LED degradation are mechanical and chemical processes which occur at rates described by the Arrhenius model. Their rates are inversely proportional to the exponent of the inverse of junction temperature.

The impact of junction temperature cannot be overstated. Successful thermal management is paramount to successful design.

Generating Heat
Junction temperature depends on three factors: power dissipation, thermal resistances of the substrate and assembly and ambient conditions. Power dissipation determines how much heat is generated, while thermal resistances and ambient conditions dictate how efficiently heat is removed. All of the light and heat produced by an LED is generated at the P-N junction.

Removing Heat
To maintain a low junction temperature, all methods of removing heat from LEDs should be considered. The three means of heat transference are conduction, convection and radiation.

Thermal conduction is the transmission of heat across matter. Thermal conductivity between materials is proportional to the temperature gradient and the cross-sectional area of the conductive path. Nearly all heat produced by LEDs is conducted through the back side of the chip. For an interface with area A and thickness l, the rate of heat conduction has the following proportion:

$$Q_{oc} \mu A \cdot ?T / l \quad (1)$$

Convection is the transfer of heat by currents in a liquid or gas. Convection rate is proportional to surface area and the temperature gradient between the surface and the fluid. For a surface with area AS and temperature TS, convection has the following proportion:

$$Q\mu \mu A_S \cdot [T_S - T_A] \quad (2)$$

Thermal radiation is electromagnetic radiation from an object’s surface due to the object’s temperature. Radiation is proportional to the object’s absolute temperature raised to the fourth power and its surface area. For a surface with area AS and temperature TS, convection has the following proportion:

$$Q\mu \mu A_S \cdot [T_S - T_A]^4 \quad (3)$$

Passive Thermal Management
Passive thermal management systems have no moving parts or consumption of additional energy. They rely primarily on conduction and radiation to remove heat from the junction. The typical method is to attach LEDs to a thermally conductive substrate, such as a metal-core IMS substrate or ceramic substrate, and then attach

the substrate to a heat sink. Novel technologies such as Optek's OptoTherm heat spreader substrate make it possible to attach the LEDs directly to the heatsink.

Active Thermal Management

Active thermal management systems involve convection by incorporating fans, heat pipes and liquid cooling. These technologies enable significantly better thermal management and should be considered for ultra-hot applications. In most cases, they are more complex and require better design to avoid decreasing the reliability of the system. These trade-offs are manageable if extreme thermal management is required.

The assembly's thermal characteristics are expressed by the following equations:

$$?T_{J\text{-}A} = Q \cdot R?_{J\text{-}A} \quad (7)$$

$$?T_{J\text{-}A} = Q \cdot [R?_{J\text{-}C} + R?_{C\text{-}A}] \quad (8)$$

$$?T_{J\text{-}A} = Q \cdot [R?_{J\text{-}C} + R?_{C\text{-}S} + R?_{TIM} + R?_{H\text{-}A}] \quad (9)$$

?TJ-A and Q must be measured and R?J-C is provided by the LED vendor. R?C-A is the combined thermal resistance of the rest of the assembly. Equation 9 can be used to calculate ?TJ-A if sufficient data is supplied by the substrate, thermal interface material, and heatsink vendors; however, it is recommended to calculate R?C-A by rearranging Equation 8 to:

$$R?_{C\text{-}A} = [?T_{J\text{-}A}] / Q - R?_{J\text{-}C} \quad (10)$$

The multiple-component assembly's thermal characteristics are described by equations that are similar to those for single-component assemblies:

$$?T_{J\text{-}A\mathit{n}} = Q_{\mathit{n}} \cdot R?_{J\text{-}A\mathit{n}} \quad (11)$$

$$?T_{J\text{-}A\mathit{n}} = Q_{\mathit{n}} \cdot R?_{J\text{-}C\mathit{n}} + Q_{Total} \cdot R?_{C\text{-}A} \quad (12)$$

$$?T_{J\text{-}A\mathit{n}} = Q_{\mathit{n}} \cdot R?_{J\text{-}C\mathit{n}} + Q_{Total} \cdot [R?_{C\text{-}S} + R?_{TIM} + R?_{H\text{-}A}] \quad (13)$$

$$R?_{C\text{-}A} = [?T_{J\text{-}A\mathit{n}}] / Q_{\mathit{n}} - R?_{J\text{-}C\mathit{n}} \quad (14)$$

For single-component assemblies, the equation for R?C-A (equation 10) is derived from equation 8. Note that equation 14 was not derived from equation 12 in a similar manner. TC is the same for all components on the multiple-component assembly, and R?C-A can be derived based on one component's ?TJ-A, Q, and R?J-C.

For the same component and power dissipation, ?T¬J-C will be the same whether the LED is alone or is part of an array. In an array, however, the heat input of all LEDs must be transferred through the substrate, TIM, and heatsink. ?TC-A and ?TJ-A increase considerably over single-component assemblies.

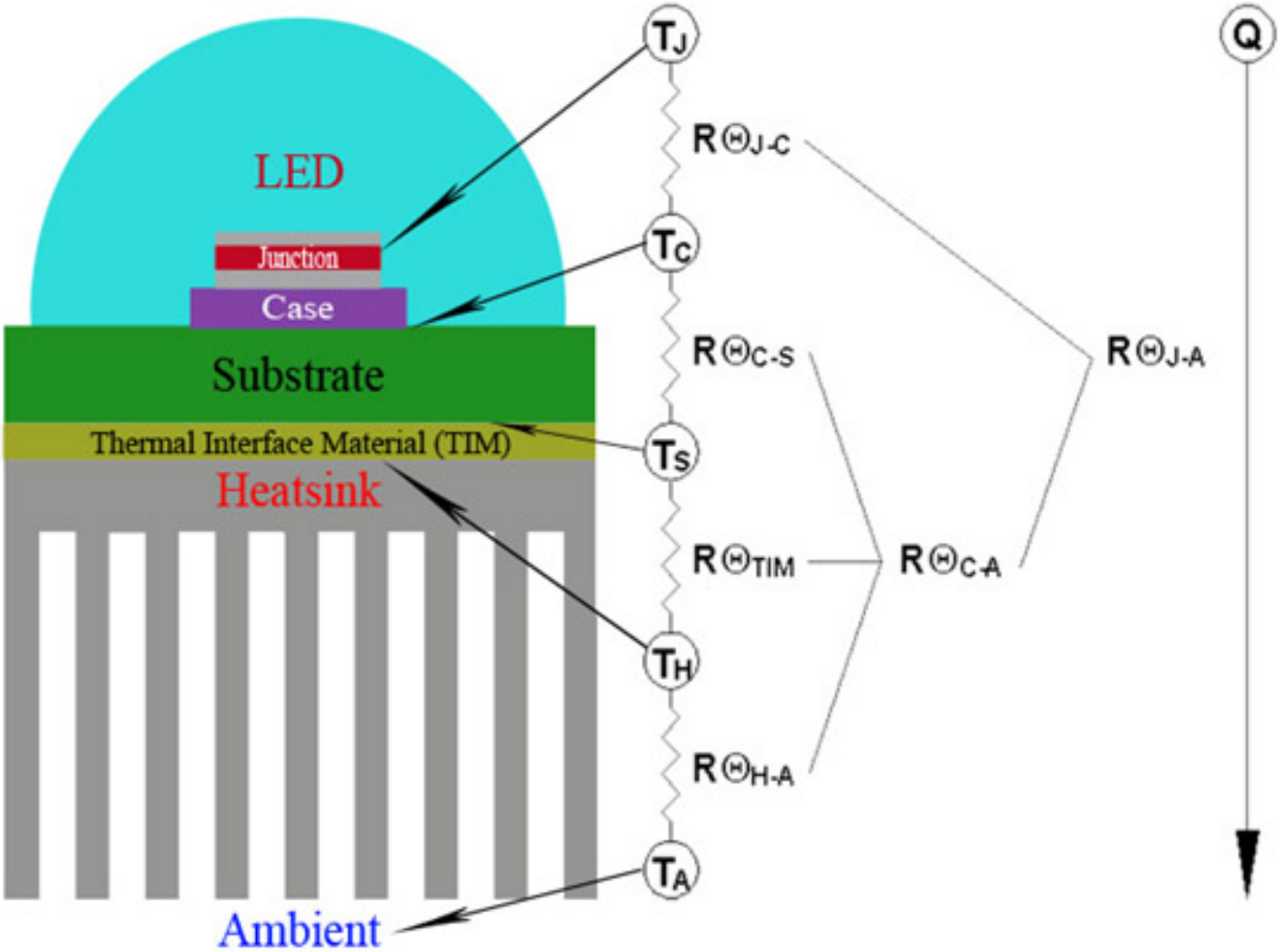

Figure 1. Thermal Model of Single-Component Assembly

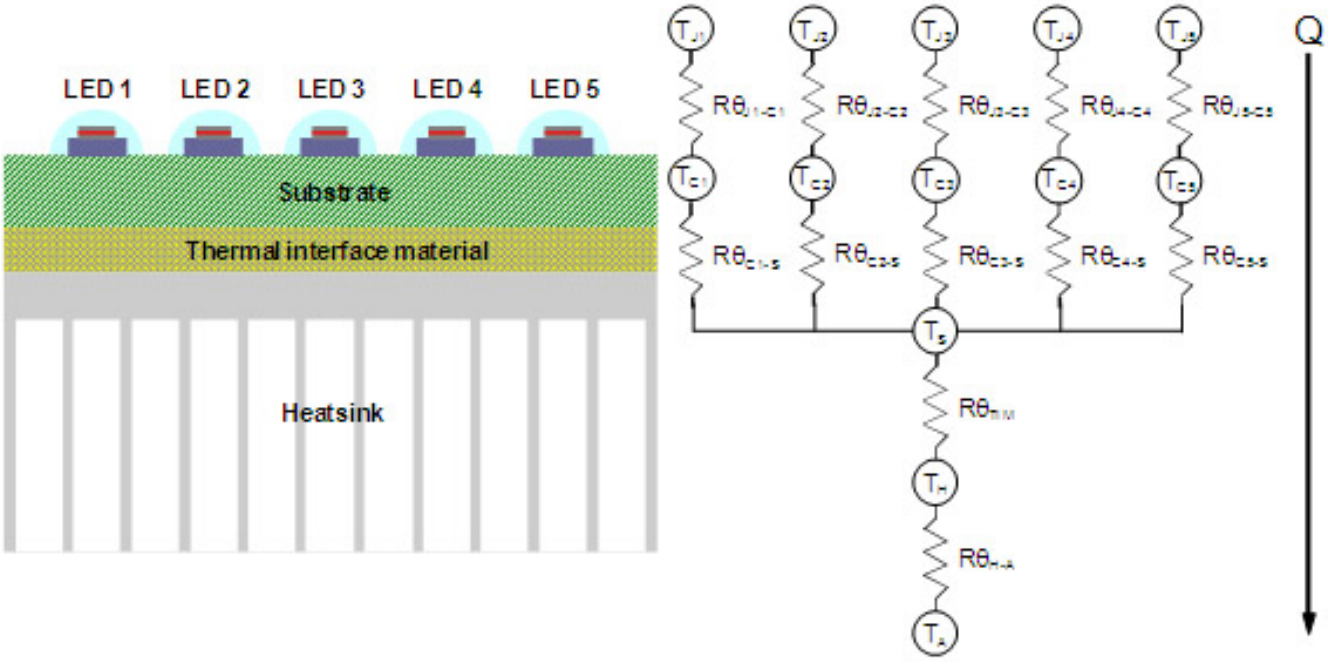

Figure 2. Thermal Model of a Multiple-Component Assembly

What Works?
Recommendations for reducing junction temperature without compromising luminous flux:

- Use components with better luminous efficacy to reduce IF and Q
- Increase the number of components at the same total power dissipation to reduce R?J-C
- Change to better packaged components to reduce R?J-C
- Use metal core substrates to minimize R?C-S
- Increase the heatsink's surface area to reduce R?H-A
- Add a fan, heat pipe or liquid cooling to reduce R?H-A

Source URL (retrieved on *07/13/2014 - 7:22pm*):
http://www.ecnmag.com/articles/2010/09/thermal-management-visible-leds?qt-most_popular=0&qt-video_of_the_day=0